Safety Precautions

Before storing, installing, wiring, operating, inspecting, or repairing the product, the user must be familiar with and adhere to the following important items to ensure safe use of the product.

⚠危险	Incorrect handling can cause danger and result in personal injury or death.
⚠注意	Incorrect handling can be dangerous, resulting in personal injury and possible damage to the equipment.
禁止	Strictly prohibited behavior, otherwise it will cause equipment damage or can not be used.

1. Use occasion

⚠危险

- Do not expose the product to moisture, corrosive gases or flammable gases. Doing so may result in electric shock or fire.
- It is forbidden to use the product in places with direct sunlight, dust, salt and metal powder.

2. Wiring

⚠危险

- Ground the grounding terminal reliably. Poor grounding may result in electric shock or fire.
- Do not connect the 220v drive power supply to the 380v power supply. Otherwise, it may cause equipment damage and electric shock or fire.
- Do not connect the u, v, w motor output terminals to the three-phase power supply, as this may result in personal injury or fire.
- The u, v, and w motor output terminals must be connected to the motor

3. operating

⚠注意

- Before the mechanical equipment starts to operate, it must be matched with the appropriate parameter settings. Failure to adjust to a suitable setting may result in loss of control or malfunction of the machine.
- Before starting operation, please confirm whether the emergency switch can be started at any time.
- Please test the servo motor for normal operation without load, and then

4. run

🛇禁止

- When the motor is running, it is forbidden to touch any rotating parts, otherwise it will cause casualties.
- Do not touch the driver and motor while the device is running, otherwise

5. Maintenance and inspection

🛇禁止

- Do not touch the inside of the drive and its motor, as this may result in electric shock.
- Do not remove the drive panel when the power is turned on, otherwise it may cause electric shock.
- Do not touch the terminals until the power is off for 5 minutes,

6. Scope of use

⚠注意

The products covered in this manual are for general industrial use. Do not use on devices that may directly endanger personal safety, such as nuclear power equipment, aerospace equipment, life support and maintenance

Chapter 1 Product Inspection and Installation

1.1 Product inspection

This product has been fully functional tested before leaving the factory. To prevent the product from being abnormal due to negligence during the product delivery process, please check the following items after unpacking:

- Check that the servo drive and servo motor models are the same as the ones ordered.
- Check the appearance of the servo drive and servo motor for damage and scratches.Do not wire the power when it is damaged during transportation.
- Check if the servo drive and servo motor are loose.Is there a loose screw, if the screw is not locked or comes off?
- Check if the servo motor rotor shaft can rotate smoothly with the hand.Motors with brakes cannot be rotated directly.If any of the above items are malfunctioning or abnormal, please contact your dealer immediately.

1.2 Installation and wiring

- Installation in electrical control cabinet
  The heat of the electrical equipment inside the electrical control cabinet and the heat dissipation conditions in the control cabinet, the temperature around the servo drive will continue to rise, so considering the cooling of the drive and the configuration inside the control cabinet, the long-term safe working temperature is below 40 °c.
- There is a heating device near the servo drive
  Servo drives operating at high temperatures can significantly shorten their life and cause malfunctions.Therefore, the servo drive should be kept below 40 °c under conditions of thermal convection and heat radiation.
- Vibration equipment near the servo drive
  Various anti-vibration measures are adopted to ensure that the servo drive is not affected by vibration, and the vibration is guaranteed to be below 0.5G (4.9m/S^2).
- Servo drive for use in harsh environments
  When the servo drive is used in a harsh environment, it is exposed to corrosive gases, moisture, metal dust, water, and processing liquids, which may cause the drive to malfunction.Therefore, when installing, you must ensure the working environment of the drive.
- Interference equipment near the servo drive
  When there is interference device near the servo driver, it will have a large interference effect on the power cable and control line of the servo driver, causing the driver to

malfunction.Noise filters and other various anti-interference measures can be added to ensure the normal operation of the drive.Note that after adding a noise filter, the leakage current will increase. To avoid this problem, an isolation transformer can be used.Pay special attention to the control signal line of the driver is very susceptible to interference, and there must be reasonable wiring and shielding measures.

1.3 installation method

- Installation direction
  The normal installation direction of the servo drive is the vertical upright direction.
- Fixed installation
  When installing, tighten the four m5 setscrews on the rear of the servo drive.
- Installation interval
  Please refer to Figure 1.1 for the installation distance between the servo drives and other devices. Note that the minimum size is indicated on the drawing. In order to ensure the performance and life of the drive, please leave as much installation interval as possible.
- Heat dissipation
  The servo drive adopts the natural cooling method, and a cooling fan must be installed in the electric control cabinet to ensure that the vertical direction of the wind dissipates heat to the heat sink of the servo drive.
- Installation Precautions
  Prevent dust or iron filings from entering the servo drive when installing the electrical control cabinet.

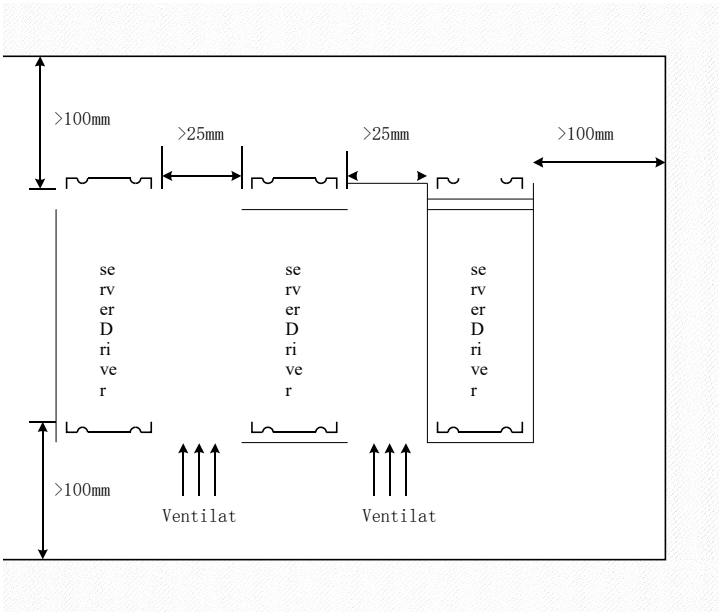

Figure 1.1 Servo drive installation diagram

1.4 Servo motor installation

1.4.1 Installation environmental conditions

- Working environment temperature: 0~40°C; working environment humidity: 80% or less (no condensation).
- Storage environment temperature: -40~50 °C; storage environment humidity: 80% or less (no condensation).
- Vibration: 0.5g or less.
- A well ventilated place with less moisture and dust.
- Non-corrosive, igniting gas, oil and gas, cutting fluid, cutting powder, iron powder and other environments.
- A place where there is no water vapor and direct sunlight.

1.4.2 installation method

- Horizontal installation: To prevent water, oil and other liquid from flowing into the motor from the motor outlet, place the cable outlet below.
- Vertical installation: If the motor shaft is mounted upwards and the gear unit is attached, care must be taken to prevent oil in the gear unit from penetrating into the motor through the motor shaft.
- The amount of protrusion of the motor shaft needs to be sufficient. If the amount of protrusion is insufficient, it will easily cause vibration when the motor moves.
- When installing and removing the motor, do not hit the motor with a hammer, otherwise the motor shaft and encoder may be damaged.

1.5 Motor rotation direction definition

The motor rotation direction defined in this manual is defined as: facing the motor shaft extension, the rotation axis rotates counterclockwise (ccw) for forward rotation, and the rotation shaft rotates clockwise (cw) for reverse rotation.

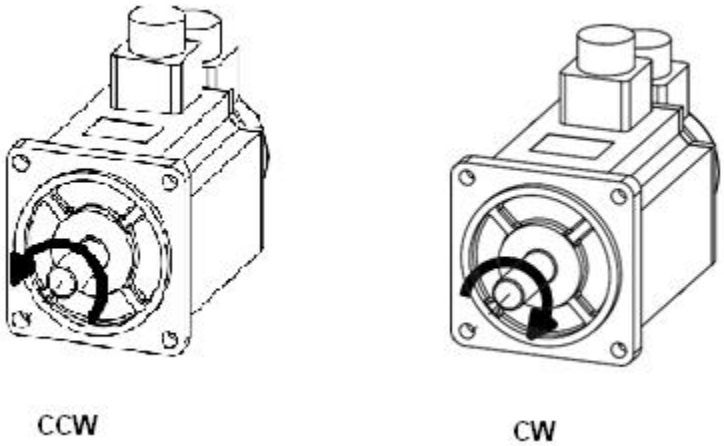

Figure 1.2 Motor rotation direction definition

Chapter 2 Wiring

2.1 Wiring specification

- Wire diameter: R, S, T, PE, U, V, W terminal wire diameter ≥ 1.5mm^2 (AWG14-16), r, t terminal wire diameter ≥
  0.75mm^2(AWG18)。
- The terminals are pre-insulated cold-pressed terminals and must be firmly connected.
- It is recommended to use a three-phase isolation transformer for power supply

2.2 Wiring method

- For the input/output signal line and the encoder signal line, use the recommended cable or similar shielded cable. The wiring length is: Input/output signal line is 3m or less, and encoder signal line is 20m or less.When wiring, connect at the shortest distance. The shorter the better, the main circuit wiring and signal line should be separated.
- The grounding wire should be thick and made a little grounded. The grounding terminal of the servo motor and the grounding terminal of the servo driver pe
  Be sure to connect.
- To prevent malfunction caused by interference, it is recommended to install a noise filter and note that:
  1) The noise filter, servo driver and host controller are installed as close as possible.
  2) Surge suppressors must be installed in coils such as relays, electromagnetic contactors, and brakes.
  3) Do not pass the main circuit and signal lines through the same pipe and do not tie them together.
- When using strong interference sources nearby (such as electric welders, electric spark machines, etc.), using an isolation transformer on the input power supply can prevent malfunctions caused by interference.
- Install a non-fuse type circuit breaker (nfb) to cut off the external power supply when the drive fails.
- Connect the cable shield correctly.

2.3 Precautions

- The terminals of the drivers u, v, and w must be in one-to-one correspondence with the motor terminals u, v, and w. Note that the motor cannot be reversed by changing the three-phase terminals, which is completely different from the asynchronous motor.
- Since the servo motor flows through the high-frequency switching current, the leakage current is relatively large, and the motor ground terminal must be connected to the servo driver ground terminal pe and grounded well.

- Since there is a large-capacity electrolytic capacitor inside the servo driver, even if the power is turned off, there is still a high voltage in the internal circuit.After the power is turned off, wait at least 5 minutes before touching the drive and motor.
- After turning on the power, the operator should keep a certain distance from the drive and motor.
- If it is not used for a long time, please cut off the power.

2.4 Standard connection

2.4.1 Position control

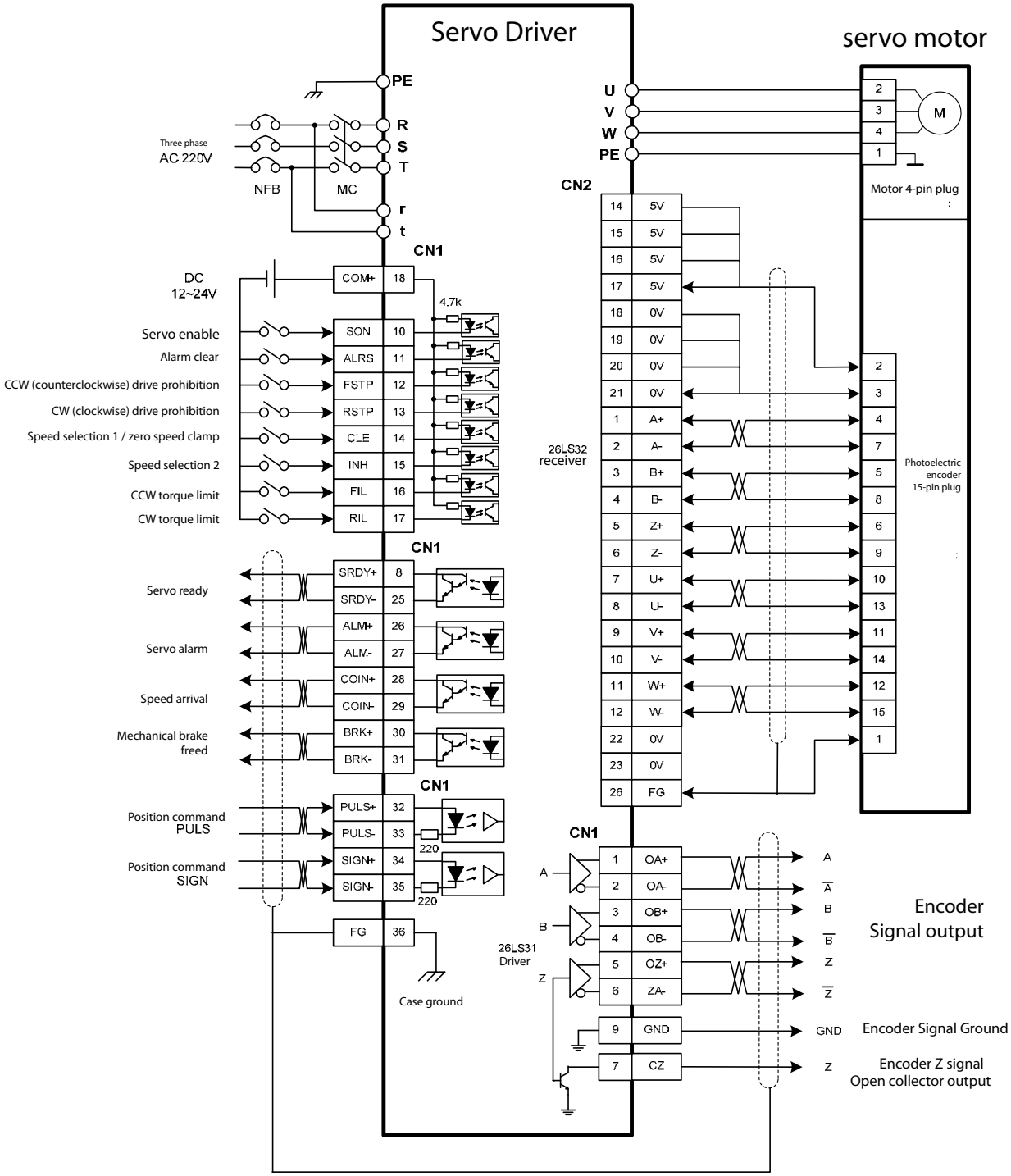

Figure 2.1 Standard wiring for speed control

Speed Control 2.4.2

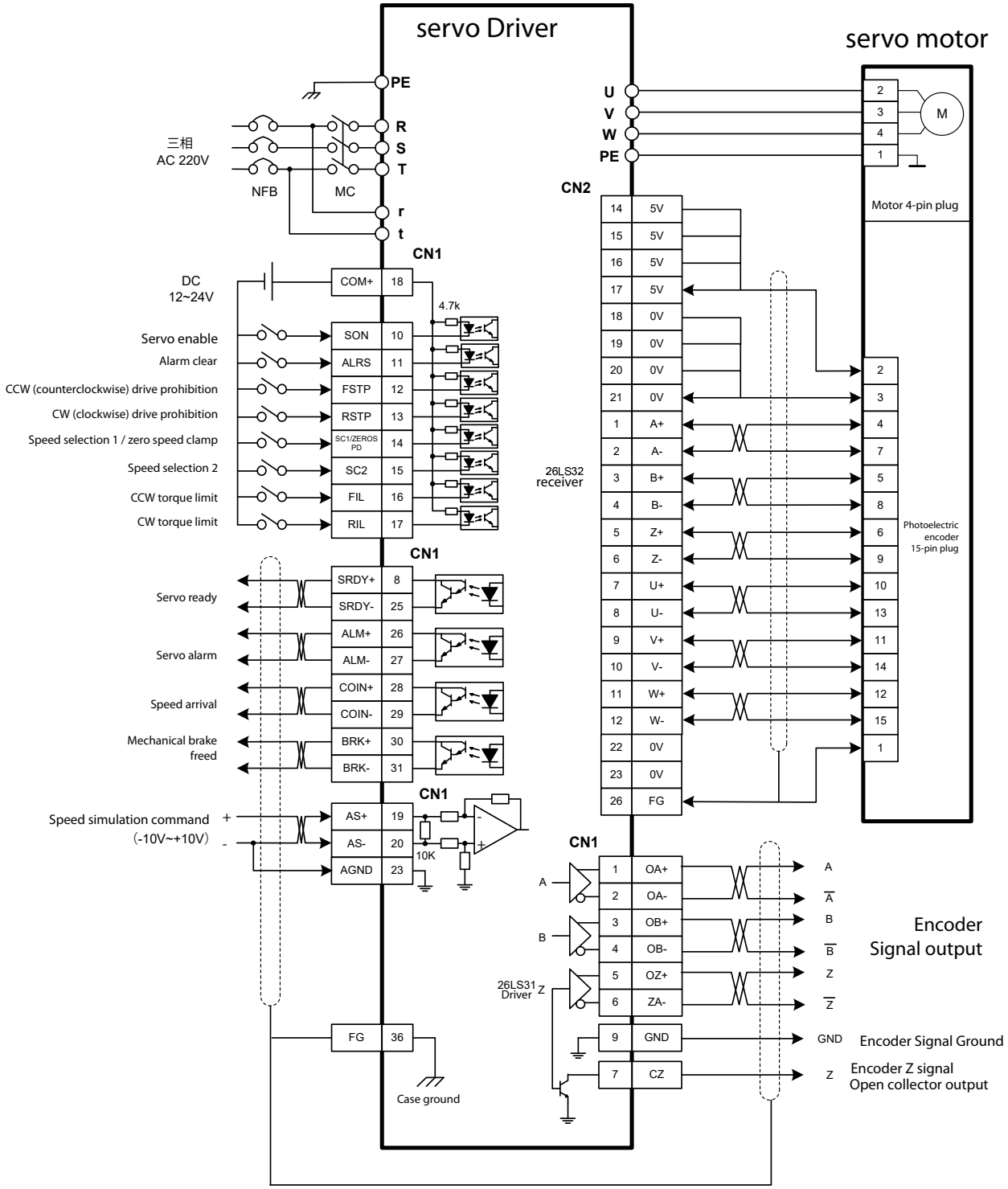

Figure 2.2 Standard wiring for speed control

Torque control 2.4.3

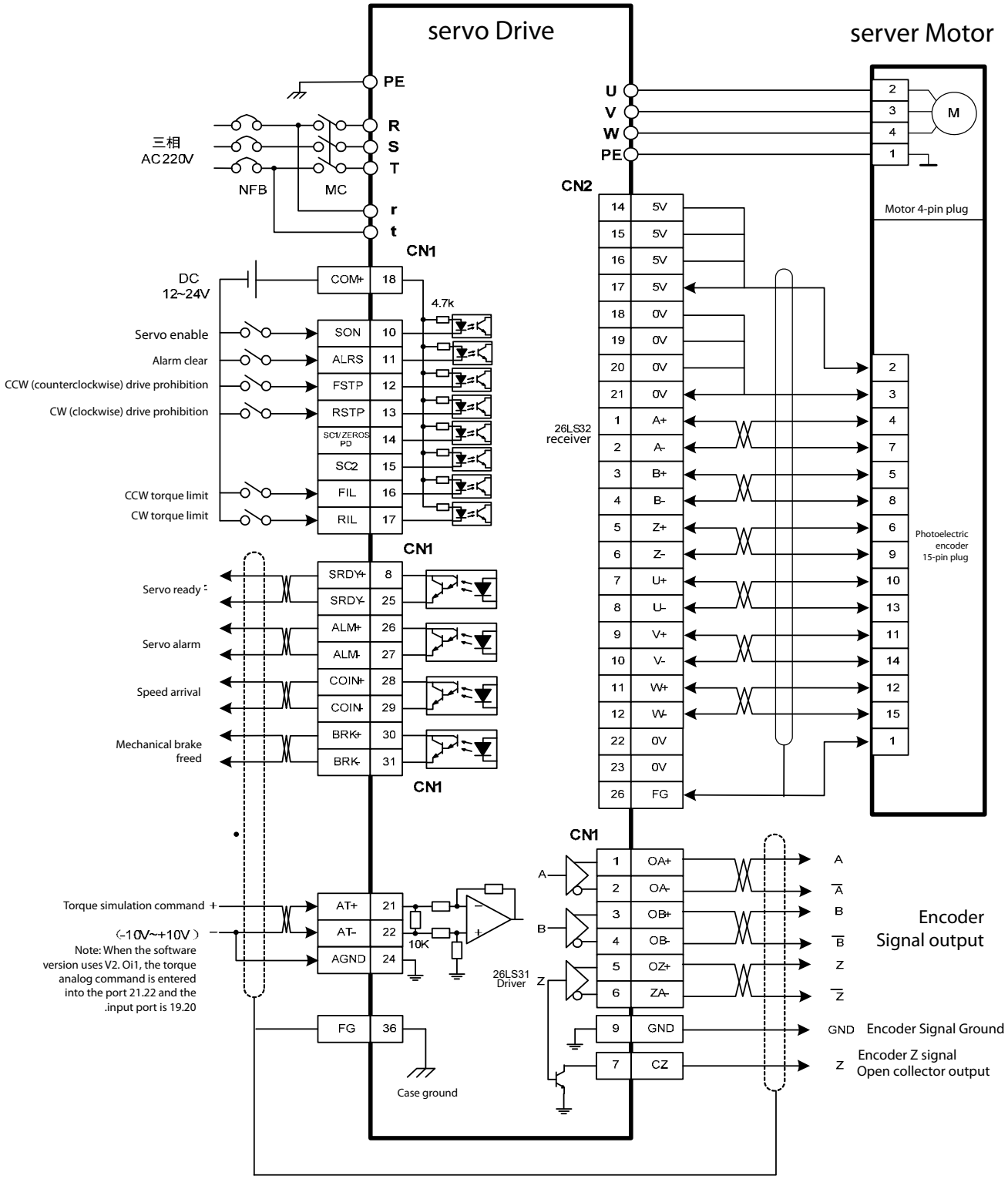

Figure 2.3 Torque Control

Chapter 3 Interface

3.1 2A/3A driver power terminal TB

Table 3.1 Power terminal TB

Terminal number	Terminal mark	Signal name	Features
1	PE	System ground	Ground terminal
2	R	Main circuit power input three-phase ac220v	Main circuit power input terminal AC220V 50Hz Note: Do not connect to the motor output terminals u, v, w.
3	S		
4	T		
5	U	Servo motor power output	Output to the servo motor power supply, It must be connected to the motor u, v, w terminals one-to-one.
6	V		
7	W		
8	PE	Ground	Ground terminal, connected to the outer casing of the motor
9	r	Control power input Single phase ac220v	Control loop power input terminal AC 220V 50Hz
10	t		

3.2 Control signal input/output terminal cn1

The control method is abbreviated as follows: p stands for position control mode; s stands for speed control mode; t stands for torque control mode.

Table 3.2 Control signal input/output terminal cn1

Terminal number	Signal name	mark	I/O	the way	Features
18	Input terminal Positive power supply	COM＋	Type1		The positive terminal of the input terminal is used to drive the light of the input terminal. Electrical coupler, DC12~24V, current ≥100mA.
10	Servo enable	SON	Type1		Servo enable input terminal. Son on: allows the drive to work; Son off: the drive is off, stop working, The motor is in a free state. Note 1: The motor must be stationary before it is hit from son off to son on. Note 2: Wait at least 50ms after hitting SON ON Enter the command again.
11	Alarm clear	ALRS	Type1		Alarm clear input terminal. Alrs on: Clear system alarm; alrs off: keep system alarm. Note: For alarms with a fault code greater than 8, this method cannot be used to clear the alarm. Then power up again.
12	Ccw driver is forbidden	FSTP	Type1		Ccw (counterclockwise) drives the disable input terminal.Fstp on : ccw drive allowed, motor can be counterclockwise direction rotation Fstp off: ccw drive is disabled, motor is prohibited from counterclockwise direction rotation. Note 1: For mechanical overrun, when the switch is off, the ccw direction torque remains at zero. Note 2: This function can be shielded by setting parameter pa20=1. Users can also connect this terminal. The ccw driver is allowed.

Terminal number	Signal name	mark	I/O	the way	Features
13	Cw drive is prohibited	RSTP	Type1		Cw (clockwise) drives the disable input terminal. Rstp on : cw drive allowed, motor can be clockwise Direction rotation Rstp off: cw drive is disabled, the motor is prohibited from clockwise Rotate. , Note 1: For mechanical overrun, when the switch is off, the torque in the cw direction remains at zero. Note 2: This function can be masked by setting parameter pa20=1 The user does not need to connect this terminal to enable the cw driver.
14	Deviation counter clear	CLE	Type1	P	In the position control mode (parameter pa4=0), the position deviation counter clears the input terminal. Cle on: position deviation counter during position control Cleared.
	Speed selection 1	SC1	Type1	S	In the speed control mode parameter (pa4=1), when the internal speed is selected (parameter pa 22=0), the speed selects 1 input terminal. In the speed control mode, the combination of sc1 and sc2 is used to select different internal speeds. Sc1 off, sc2 off : internal speed 1; sc1 on, sc2 off : internal speed 2; sc1 off, sc2 on : internal speed 3; sc1 on, sc2 on : internal speed 4. Note: The value of internal speed 1~4 can be modified by parameters.
	Zero speed clamp	ZEROSPD	Type1	S	In the speed control mode parameter (pa4=1), when the external simulation speed is selected (parameter pa22=1, default value). Zerospd on: forced regardless of the analog input The speed command is zero; Zerospd off: The speed command is the analog input value.

Terminal number	Signal name	mark	I/O	the way	Features
15	Command pulse prohibition	INH	Type1	P	In the position control mode (parameter pa4=0), the position command pulse disables the input terminal. Inh on : command pulse input is prohibited; Inh off: The command pulse input is valid.
	Speed selection 2	SC2	Type1	S	In the speed control mode parameter (pa4=1), when the internal speed is selected (parameter pa22=0), the speed selects 2 input terminals. In the speed control mode, the combination of sc1 and sc2 is used to select different internal speeds. Sc1 off, sc2 off : internal speed 1; sc1 on, sc2 off : internal speed 2; sc1 off, sc2 on : internal speed 3; SC1 ON， SC2ON : Internal speed 4.
16	Ccw torque limit	FIL	Type1		Ccw (counterclockwise) torque limit input terminal.Fil on :ccw torque limit is within the range of parameter pa36; Fil off: ccw Torque limit is not limited by parameter pa36.Note: Whether fil is valid or invalid, ccw torque Also limited by parameter pa34, general | parameters Pa34|>|Parameter pa36|.
17	Cw torque limit	RIL	Type1		Cw (clockwise) torque limit input terminal.Ril on :cw torque limit in parameter pa37 range Inside; Ril off: cw Torque limit is not limited by parameter pa37.Note: Whether ril is valid or not, cw torque Also limited by parameter pa35, general | parameters Pa35|>|Parameter pa37|.
8	Servo ready output	SRDY＋	Type2		The servo is ready for the output terminal. Srdy on: control power and main power is normal, the drive has no alarm, the servo is ready to output on (output is turned on; Srdy off: The main power supply is not connected or the drive has an alarm, and the servo is ready to output off (output cutoff.
25		SRDY－			

26	Servo alarm output	ALM＋	Type2		Servo alarm output terminal. Alm on: servo drive has no alarm, servo alarm output is (output is turned on; Alm off: servo drive has alarm, servo alarm Out off (output cutoff.
27		ALM－			

Terminal number	Signal name	mark	I/O	the way	Features
28	Positioning completion output (in position control mode) Speed reaches output (in speed control mode)	COIN＋	Type2	P S	Positioning completed output terminal. Coin on: When the position deviation counter value is within the set positioning range, the positioning completion output is on (the output is turned on, otherwise the output is off (output is off). The speed reaches the output terminal. Coin on: When the speed reaches or exceeds the set speed, the speed reaches the output on (the output is turned on, otherwise the output is off (the output is off).
29		COIN－		P S	
30	Mechanical brake release	BRK＋	Type2		This port can be used to control the brake when the motor has a mechanical brake (power loss retainer). Brk on: the brake is energized, the brake is invalid, and the motor can run; Brk off: The brake is cut off, the brake is effective, the motor is locked and cannot be operated. Note: The brk function is controlled internally by the drive.
31		BRK－			
32	Command pulse Plus input	PULS＋	Type3	P	External command pulse input terminal. Note: The pulse input mode is set by parameter pa14. ● Pa14=0, command pulse + symbol mode (default state; ● Pa14=1, ccw/cw command pulse mode; ● Pa14=2, 2-phase command pulse mode.
33		PULS－			
34	Command pulse Sign input	SIGN＋	Type3	P	
35		SIGN－			
19	Analog speed command input	AS＋	Type4	S	External analog speed command input terminal, differential mode, input impedance 10kΩ, input range -10V~+10V.
20		AS－			
23	Analog ground	AGND			The ground of the analog input.
21	Analog torque command	AT＋	Type4	T	External analog torque command input terminal, differential mode, input impedance 10kΩ, input

22	input	AT－			range -10V~+10V. Note: When the software version uses v2.0 or above, the torque analog command input port 21.22 is changed to the input port 19.20.
24	Analog ground	AGND			The ground of the analog input.

Terminal number	Signal name	mark	I/O	the way	Features
1	Encoder a phase signal	OA＋	Type5		● Encoder abz signal differential drive output (26ls31 output, equivalent to rs422; ● Non-isolated output (non-isolated).
2		OA－			
3	Encoder b phase signal	OB＋	Type5		
4		OB－			
5	Encoder z-phase signal	OZ＋	Type5		
6		OZ－			
7	Encoder z phase collector open output	CZ	Type6		● The encoder z-phase signal is output by the open collector. When the encoder z-phase signal appears, the output is on (output is on), otherwise the output is off (output is off); ● Non-isolated output (non-isolated); ● In the host computer, the z-phase signal pulse is usually very narrow, so please use a high-speed optocoupler to receive.
9	Encoder public Ground wire	GND			Encoder common ground.
36	Shield ground	FG			Shield the ground terminal.

3.3 Encoder signal input terminal cn2

Table 3.3 Encoder signal input terminal cn2

Terminal number	Signal name	Features		
		mark	I/O	description
14 15 16 17	5v power supply	+5V		Servo motor photoelectric encoder with +5v power supply and public Ground; when the cable length is long, multiple core wires should be used and connected, to reduce line voltage drop.
18 19 20 21 22 23	Power public	0V		
1	Encoder a+ input	A＋	Type7	Connected to the photoelectric encoder a+.
2	Encoder a-input	A－		Connected to the photoelectric encoder a-.
3	Encoder b+ input	B＋	Type7	Connected to the photoelectric encoder b+.
4	Encoder b-input	B－		Connected to the photoelectric encoder b-.
5	Encoder z+ input	Z＋	Type7	Connected to the photoelectric encoder z+.
6	Encoder z-input	Z－		Connected to the photoelectric encoder z-.
7	Encoder u+ input	U＋	Type7	Connected to the photoelectric encoder u+.
8	Encoder u-input	U－		Connected to the photoelectric encoder u-.
9	Encoder v+ input	V＋	Type7	Connected to the photoelectric encoder v+.
10	Encoder v-input	V－		Connected to the photoelectric encoder v-.
11	Encoder w+ input	W＋	Type7	Connected to the photoelectric encoder w+.
12	Encoder w-input	W－		Connected to the photoelectric encoder w-.
26	Shield ground	FG		Shield the ground terminal.

3.4 Interface terminal configuration

Figure 3.1 shows the configuration diagram of the servo driver interface terminal cn1, and cn1 is a 36-pin connector.Figure 3.2 shows the configuration diagram of the servo driver interface terminal cn2, and cn2 is a 26-pin connector.

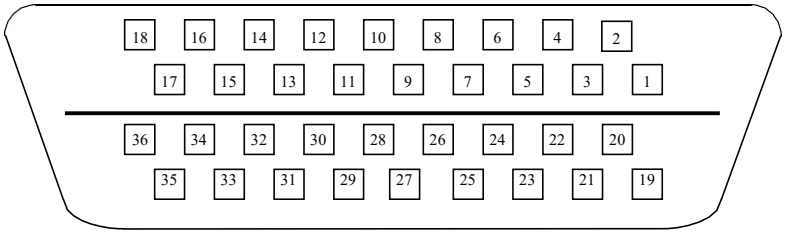

Figure 3.1 cn1 plug soldering piece (s361, facing the solder tab of the plug)

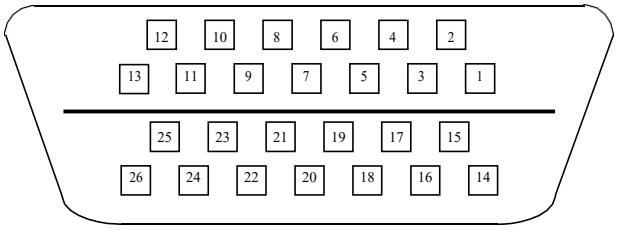

Figure 3.2 cn2 plug soldering piece (s261, see the solder tab facing the plug)

3.5 Driver Connection

3.5.1 CN1 Signal

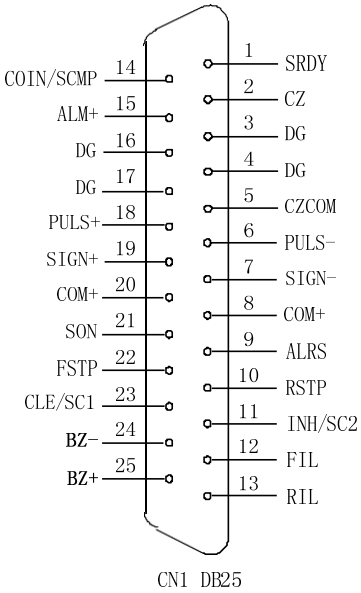

Figure 3-3 Pin diagram of the cn1 hole type wire bond plug (on the wire side)

Terminal number	**Signal name**	**mark**	**the way**	
CN1-8 CN1-20	Input terminal power supply is positive pole	COM+		Input terminal power supply positive Optocoupler for driving the input terminal DC 12 V～24V
CN1-21	Servo enable	SON	P,S	Servo enable input terminal Son:on allows AC servo drive unit to work Son:off AC servo drive unit is off, stop working, motor is free **Note 1: The motor must be stationary before the son state changes from off to on;** **Note 2: After the SON status turns ON, wait at least 50ms. Given run command**
CN1-9	Alarm clear	ALRS	P,S	Alarm clear input terminal Alrs:on clear system alarm Alrs:off keeps the system alarm **Note: For alarms with fault code greater than 8, it cannot be cleared by this method. It needs power-off maintenance and then power on again.**
CN1-22	Ccw driver is forbidden	FSTP	P,S	Ccw (counterclockwise) drive disable input terminal Fstp:on counterclockwise rotation drive allows Fstp:off counterclockwise rotation drive prohibition **Note 1: For mechanical overrun, when the switch is off, the ccw direction torque remains at 0;** **Note 2: This function can be masked by parameter No.20, or forever Far away the switch is on.**
CN1-10	Cw drive is prohibited	RSTP	P,S	Cw (clockwise) drive disable input terminal Rstp:on Rotate the drive in a clockwise direction Rstp:off Rotate the drive in a clockwise direction **Note 1: For mechanical overrun, when the switch is off, the torque in the cw direction remains at 0;** **Note 2: This function can be masked by parameter No.20, or forever Far away the switch is on.**
CN1-23	Deviation count Clear	CLE	P	Position deviation counter clear input terminal Clear position error counter when cle:on position control
	Speed selection 1	SC1	S	Speed selection 1 input terminal In speed control mode, the combination of sc1 and sc2 is used to select different internal speeds. Sc1:off,sc2:off internal speed 1 Sc1:on,sc2:off internal speed 2 Sc1:off,sc2:on internal speed 3 Sc1:on,sc2:on internal speed 4 **Note: The internal speed 1~4 value can be modified by parameters.**

Terminal number	Signal name	mark	the way	Function
CN1-11	Command pulse prohibition	INH	P	Position command pulse inhibit input terminal Inh:on command pulse input is forbidden Inh:off command pulse input is valid
	Speed selection 2	SC2	S	Speed selection 2 input terminal In speed control mode, the combination of sc1 and sc2 is used to select different internal speeds. Sc1:off,sc2:off internal speed 1 sc1:on, sc2:off internal speed 2 Sc1:off,sc2:on internal speed 3 Sc1:on,sc2:on internal speed 4
CN1-12	Ccw torque limit	FIL	P,S	Ccw (counterclockwise) torque limit input terminal FIL: ON Counterclockwise torque limit is within the range of parameter No.36 FIL:OFF Counterclockwise torque limit is not limited by parameter No.36 **Note: ccw torque is subject to parameters regardless of whether fil is valid or invalid. No.34 Limit, in general, parameter No.34> Parameter No.36**
CN1-13	Cw torque limit	RIL	P,S	CW (clockwise) torque limit input terminal RIL: ON Clockwise torque limit within parameter No.37 RIL:OFF Clockwise torque limit is not limited by parameter No.37 **Note: cw torque is also affected by parameters, regardless of whether ril is valid or invalid. No.35 Limit, in general, parameter No35> Parameter No.37**
CN1-1	Servo ready output	SRDY	P,S	Servo ready output terminal srdy:on Control power and main power are normal, AC servo drive unit has no alarm, servo is ready to output on. Srdy:off The main power supply is not connected or the AC servo drive unit has an alarm, and the servo is ready to output off.
CN1-15	Servo alarm output	ALM	P,S	Servo alarm output terminal Alm:on The servo unit has no alarm and the servo alarm output is on. Alm:off servo unit has alarm, servo alarm output is off
CN1-14	Positioning completion output	COIN	P	Positioning completed output terminal Coin:on When the position deviation counter value is within the set positioning range, the positioning completion output is on.
	Speed arrival output	SCMP	S	The speed reaches the output terminal scmp:on When the speed reaches or exceeds the set speed, the speed reaches the output on.
CN1-3 CN1-4 CN1-16 CN1-17	Common end of the output terminal	DG		Ground terminal of control signal output terminal (except cz)
CN1-2	Encoder z Phase output	CZ	P,S	Encoder z phase output terminal Photoelectric encoder z-phase pulse output of servo motor Cz:on z phase signal appears
CN1-5	Encoder z Common end of phase output	CZCOM	P,S	Common end of the encoder z-phase output terminal
CN1-18	Command pulse Plus lose Enter	PULS+	P	External command pulse input terminal **Note: Pulse input mode is set by parameter 04** **① Command pulse + symbol mode;** **② Ccw/cw instruction pulse mode;**
CN1-6		PULS-		
CN1-19	Command pulse Sign input	SIGN+	P	
CN1-7		SIGN-		
CN1-24	Brake negative level	BZ-	**P,S**	**This port can be used to control the brake when the motor has a mechanical brake (power loss retainer)** **Bz on: the brake is energized, the brake is invalid, and the motor can run;**

CN1-25	Brake positive level	BZ+	P,S	**Bz off: the brake is cut off, the brake is effective, the motor is locked and cannot be operated** **The bz function is controlled internally by the drive.**

3.5.2 Cn2 interface definition

The motor encoder feedback input interface cn2 of the series servo unit is a d-sub25 hole socket, and the connector for making the cable should be a 25-pin plug.The pin definition is shown in the figure below:

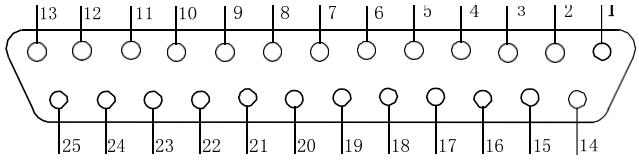

Figure 3-4 cn2 db25 pin bond wire plug pin

Pin number	name	significance	Pin number	name	meaning Righteousness
1	0V	Encoder power supply (-)	14	FG	Shielding ground
2	0V		15	FG	
3	0V		16	0V	Encoder power supply (-)
4	0V		17	5V	Encoder power supply (+)
5	5V	Encoder power supply (+)	18	5V	
6	5V		19	W＋	Incremental encoder feedback w+
7	W－	Incremental encoder feedback w-	20	V＋	Incremental encoder feedback v+
8	V－	Incremental encoder feedback v-	21	U＋	Incremental encoder feedback u+
9	U－	Incremental encoder feedback u-	22	Z＋	Incremental encoder feedback z+
10	Z－	Incremental encoder feedback z-	23	B＋	Incremental encoder feedback b+
11	B－	Incremental encoder feedback b-	24	A＋	Incremental encoder feedback a+
12	A－	Incremental encoder feedback a-	25	NC	Empty foot
13	NC	Empty foot			

3.6 Input/output interface type

3.6.1 Digital input interface

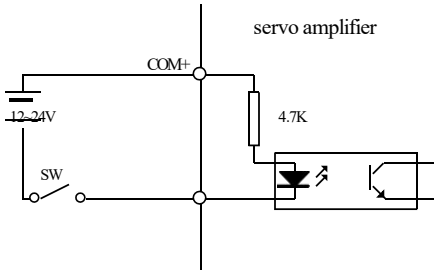

Figure 3.3 Type1 digital input interface

- Power supply by the user, DC12~24V, current ≥100mA;
- Note that if the current polarity is reversed, the servo drive will not work.

3.6.2 Switch output interface

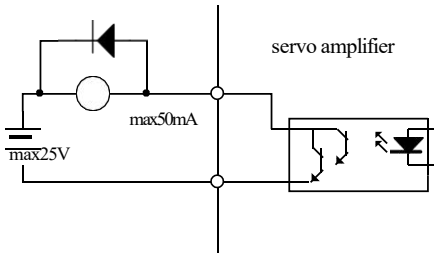

a. Relay connection

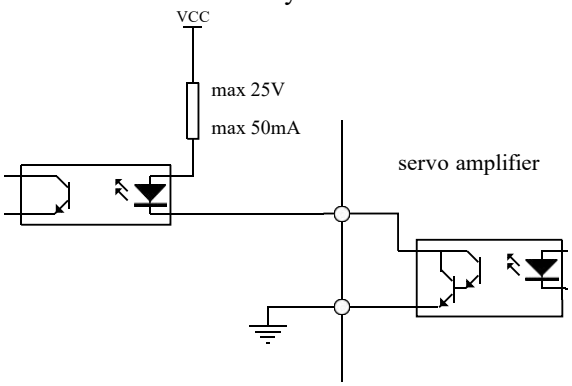

b. Optocoupler connection

Figure 3.4 Type2 digital output interface

- The output is a Darlington transistor connected to a relay or optocoupler;
- The external power supply is provided by the user, but it must be noted that if the polarity of the power supply is reversed, the servo drive will be damaged;
- The output is in the form of an open collector with a maximum current of 50mA and an external power supply with a maximum voltage of 25V.Therefore, the load of the digital output signal must meet this limit.If the limit is exceeded or the output is directlyconnecte to the power supp y,

Will damage the servo drive;

- If the load is an inductive load such as a relay, the freewheeling diode must be connected in anti-parallel across the load.If the freewheeling diode is reversed, the servo drive will be damaged;
- The output transistor is a Darlington transistor. When turned on, the voltage drop v_{ce} between the collector and the emitter set is about 1v, which cannot meet the ttl low level requirement, so it cannot be directly connected to the ttl integrated circuit.

3.6.3 Pulse input interface

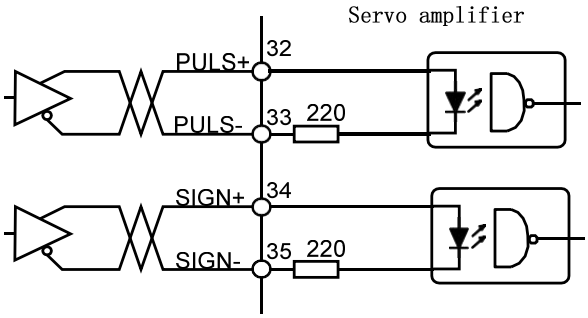

Figure 3.5 Differential drive mode for Type3 pulse input interface

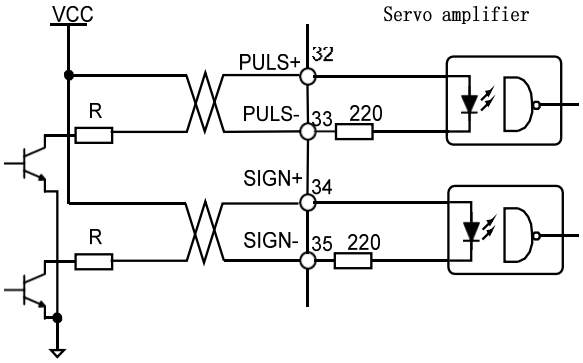

Figure 3.6 Single-ended drive mode for Type3 pulse input interface

- In order to correctly transmit the pulse amount data, it is recommended to use a differential drive method.
- In the differential drive mode, the am26ls31, mc3487 or similar rs422 line driver is used.
- With a single-ended drive, the operating frequency is reduced, with a maximum pulse frequency of 200 kHz.According to the pulse amount input circuit, the driving current is 10~15mA, and the condition that the maximum voltage of the external power supply is 25V is determined, and the value of the resistor R is determined.Empirical data: VCC=24V, R=1.3~2k; VCC=12V, R=510~820Ω; VCC=5V, R=82~120 Ω 。
- When using single-ended drive mode, the external power supply is provided by the user.However, it must be noted that if the polarity of the power supply is reversed, the servo drive will be damaged.
- The pulse input form is shown in Table 3.4. The arrow indicates the counting edge. Table 3.5

shows the pulse input timing and parameters.When used

In the case of 2-phase input, its 4 octave pulse frequency is ≤ 500 kHz.

Table 3.4 Pulse input form

Pulse	CCW	CW	Parameter
Pulse symb	PULS SIGN		0 Command pulse
Ccw pulse Cw pulse	PULS SIGN		1 Ccw pulse / cw
Phase a Phase b	PULS SIGN		2 2-phase

Table 3.5 Pulse Input Timing Parameters

parameter	Differential drive input	Single-ended drive input
t_{ck}	>2μS	>5μS
t_h	>1μS	>2.5μS
t_l	>1μS	>2.5μS
t_{rh}	<0.2μS	<0.3μS
t_{rl}	<0.2μS	<0.3μS
t_s	>1μS	>2.5μS
t_{qck}	>8μS	>10μS
t_{qh}	>4μS	>5μS
t_{ql}	>4μS	>5μS
t_{qrh}	<0.2μS	<0.3μS
t_{qrl}	<0.2μS	<0.3μS
t_{qs}	>1μS	>2.5μS

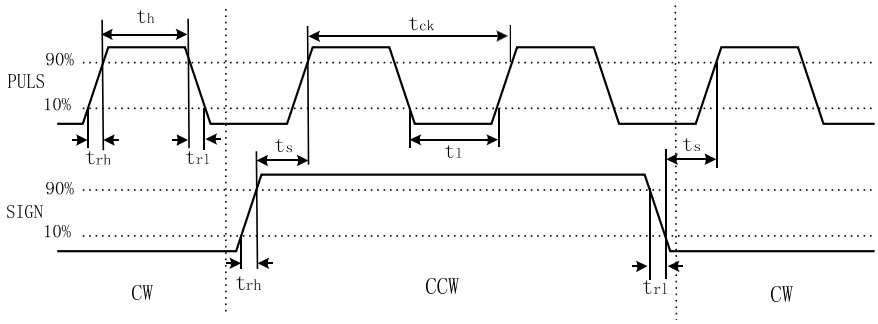

Figure 3.7 Timing diagram of pulse + symbol input interface (highest pulse frequency 500kHz)

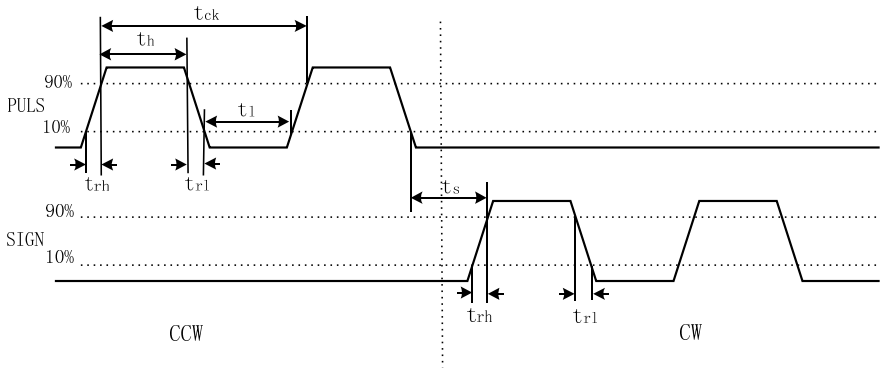

Figure 3.8 CCW pulse / CW pulse input interface timing diagram (highest pulse frequency 500kHz)

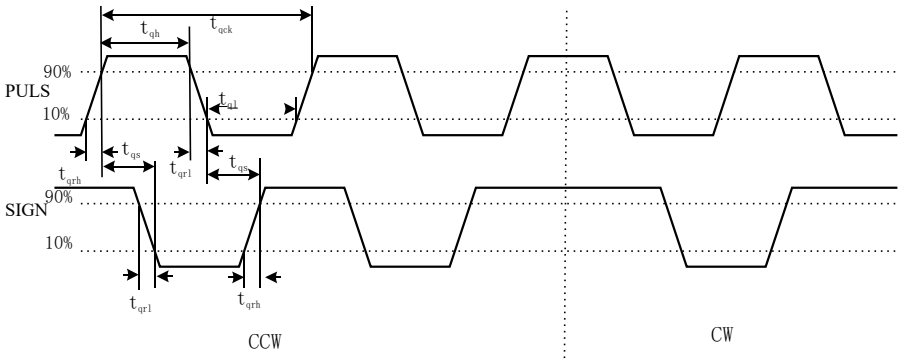

Figure 3.9 2-phase command pulse input interface timing diagram (highest pulse frequency 125kHz)

3.6.4 Analog input interface

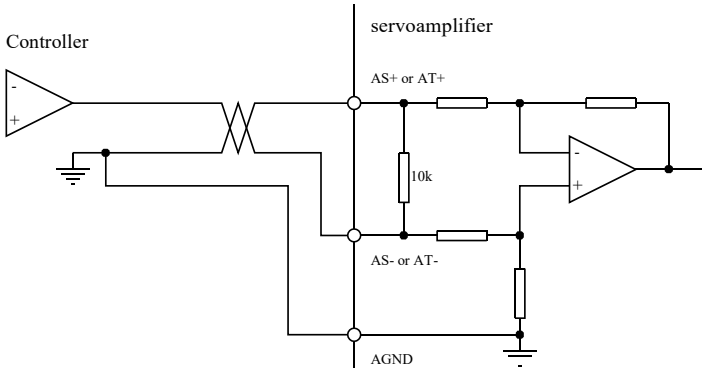

Figure 3.10 a Analog Differential Input Interface (type4)

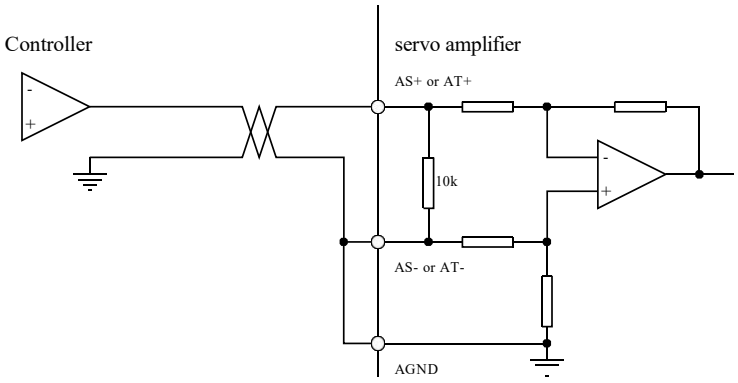

Figure 3.10 b Analog single-ended input interface (type4)

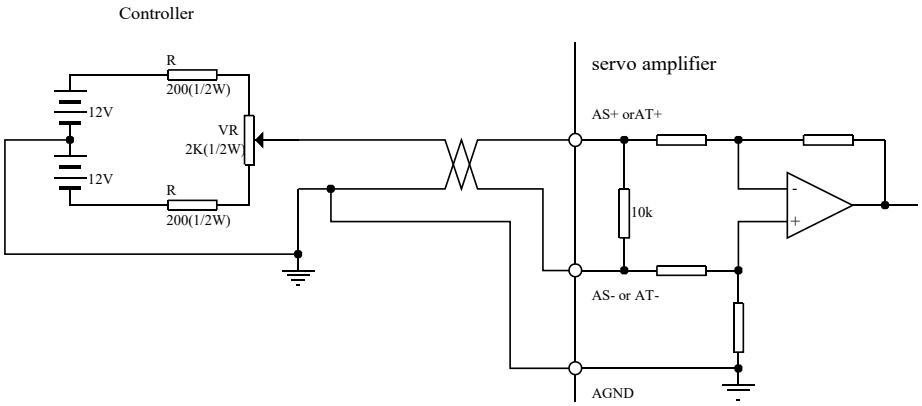

Figure 3.10 c Analog Differential Potentiometer Input Interface (type4)

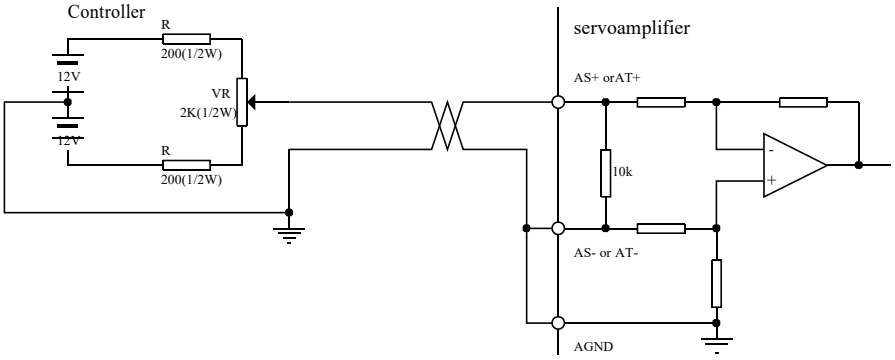

Figure 3.10 d Analog single-ended potentiometer input interface (type4)

- The analog input interface is a differential mode. According to the connection method, it can be connected into differential and single-ended forms, and the input impedance is 10kΩ.The input voltage range is -10V~+10V;
- In the differential connection, the analog ground and the input negative are connected on the controller side, and the controller to the driver requires three wires to be connected;
- In the single-ended connection, the analog ground and the input negative are connected on the driver side, and the controller to the driver requires two wires to be connected;
- Differential connection is superior to single-ended connection, which suppresses common mode interference;
- The input voltage should not exceed the range of -10v~+10v, otherwise the drive may be damaged.
- It is recommended to use shielded cable connections to reduce noise interference;
- It is normal for the analog input interface to have a zero offset. The zero offset can be compensated by adjusting the parameter pa45.
- The analog interface is non-isolated (non-isolated).

3.6.5 Encoder signal output interface

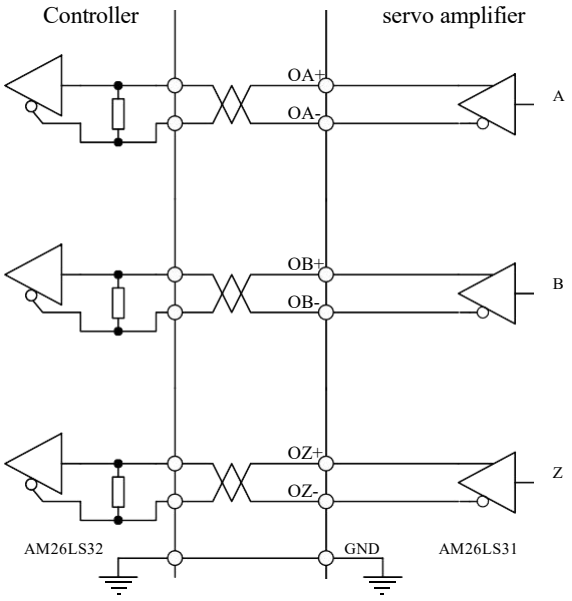

Figure 3.11 a Photoelectric encoder output interface (Type5)

- The encoder signal is output via a differential driver (am26ls31).
- The controller input can use the am26ls32 receiver, which must be connected to the terminating resistor, about 330ω.
- The controller ground and the drive ground must be reliably connected.
- Non-isolated output.
- The controller input can also be accepted with a photocoupler, but a high speed optocoupler (eg 6n137) must be used.

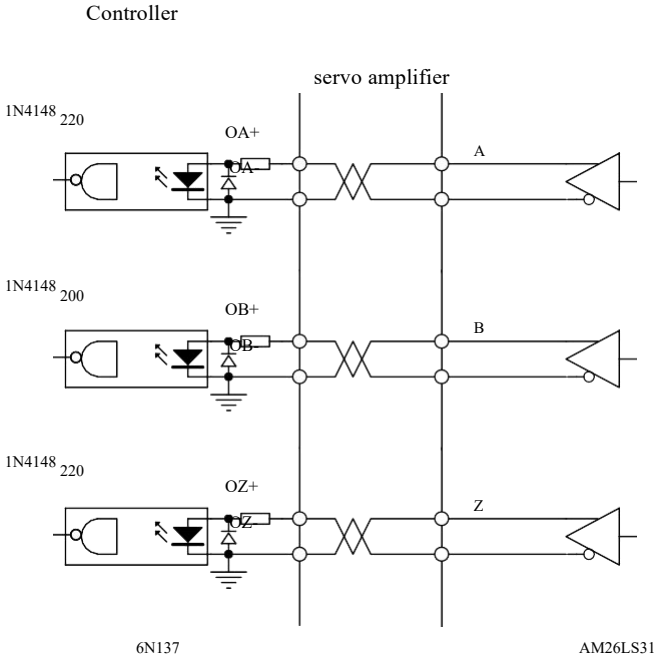

Figure 3.11 b Photoelectric encoder output interface (Type5)

3.5.6 Encoder z signal open collector output interface

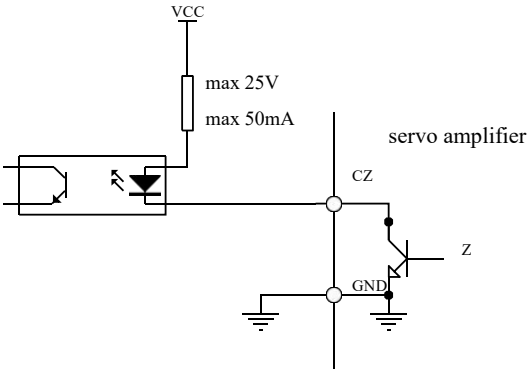

Figure 3.12 Photoelectric encoder output interface (Type6)

- The encoder z-phase signal is output by the open collector. When the encoder z-phase signal appears, the output is on (output is on), otherwise the output is off (output is off);
- Non-isolated output (non-isolated);
- In the host computer, the z-phase signal pulse is usually narrow, so please use a high-speed optocoupler to receive (for example, 6n137).

3.5.7 Servo motor photoelectric encoder input interface

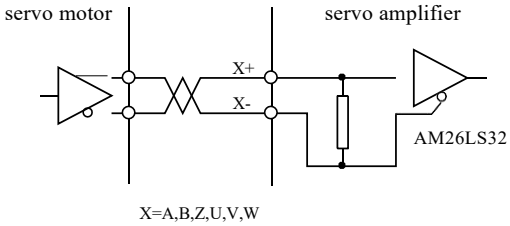

Figure 3.13 Servo motor photoelectric encoder input interface

3.7 5a drive power terminal tb

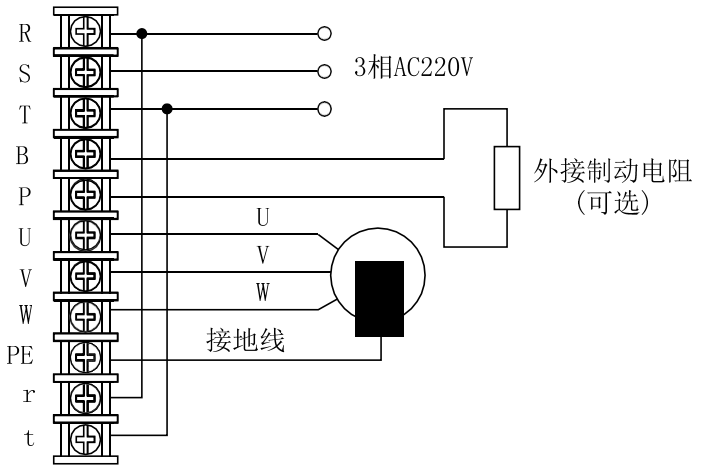

Figure 3.14 5a drive power terminal tb

Pay special attention to the addition of external braking resistor terminals b, p compared to 2a/3a drivers. In general,

b, p terminal is suspended, no external resistor is needed.When there is excessive regenerative energy due to deceleration, internal brake power

The resistance can not be completely absorbed, resulting in Err-2 over-voltage alarm or Err-14 braking alarm. The deceleration time can be increased as appropriate. If an alarm still occurs, it is necessary to externally connect the braking resistor through the B and P terminals to enhance the braking effect.The external braking resistor has a resistance range of 40~200Ω and power of 100~50W. The smaller the resistance is, the larger the braking current is. The greater the braking resistor power is, the larger the braking energy is, but the resistance is too small. The drive is damaged. The test method is to change the resistance from large to small until the drive no longer has an alarm.The external braking resistor and internal braking resistor (approximately 40Ω) are connected in parallel.The external braking resistor must be operated after the drive has been powered down for 5 minutes, after the internal high pressure bleed is completed.

b. The p terminal is connected to the internal high voltage circuit. The b and p terminals cannot be touched within 5 minutes after power-on and power-off to prevent electric shock. The b and p terminals cannot touch other terminals to prevent short circuit and damage the driver.

Chapter 4 Parameters

4.1 Parameter list

The factory values in the table below are taken as 110st-m02030 (with 2a driver), and the parameters marked with "*" may be different in other models.

Serial number	name	Applicable method	Parameter range	Factory default	unit
0	password	P，S，T	0~9999	315	
1	Model code	P，S，T	0~51	30*	
2	Software version (read only)	P，S，T	*	*	
3	Initial display status	P，S，T	0~21	0	
4	Control method selection	P，S，T	0~6	0	
5	Speed proportional gain	P，S	5~2000	150*	Hz
6	Speed integral time constant	P，S	1~1000	20*	ms
7	Torque filter	P，S，T	20~500	100	%
8	Speed detection filter	P，S	20~500	100	%
9	Position proportional gain	P	1~1000	40	1/s
10	Position feed forward gain	P	0~100	0	%
11	Position feedforward filter cutoff frequency	P	1~1200	300	Hz
12	Position command pulse frequency division molecule	P	1~32767	1	
13	Position command pulse frequency division denominator	P	1~32767	1	
14	Position command pulse input method	P	0~2	0	
15	Position command pulse direction is reversed	P	0~1	0	
16	Positioning completion range	P	0~30000	20	pulse
17	Position error detection range	P	0~30000	400	×100 pulses
18	Position error is invalid	P	0~1	0	
19	Position command smoothing filter	P	0~30000	0	0.1ms
20	Drive inhibit input is invalid	P，S，T	0~1	0	
21	Jog running speed	S	-3000~3000	120	r/min
22	Internal and external speed command selection	S	0~1	1	

Serial number	name	Applicable method	Parameter range	Factory default	unit
30	User torque overload alarm value	P，S，T	1~300	300	%
31	User torque overload alarm detection time	P，S，T	0~32767	0	ms
32	Control mode switching allowed	P，S，T	0~1	0	
33	Invert the analog torque command input direction	T	0~1	0	
34	Internal ccw torque limit	P，S，T	0~300	300*	%
35	Internal cw torque limit	P，S，T	-300~0	-300*	%
36	External ccw torque limit	P，S，T	0~300	100	%
37	External cw torque limit	P，S，T	-300~0	-100	%
38	Speed test run, jog run torque limit	S	0~300	100	%
39	Analog torque command zero offset compensation	T	-2000~2000	0	
40	Acceleration time constant	S	1~10000	0	ms
41	Deceleration time constant	S	1~10000	0	ms
42	s type acceleration and deceleration time constant	S	1~1000	0	ms
43	Analog speed command gain	S	10~3000	300	(r/min) / V
44	Analog speed command direction is reversed	S	0~1	0	
45	Analog speed command zero offset compensation	S	-5000~5000	0	
46	Analog speed command filter	S	0~1000	300	Hz
47	Mechanical brake action setting when the motor is stopped	P，S，T	0~200	0	×10ms
48	Mechanical brake action setting when the motor is running	P，S，T	0~200	50	×10ms
49	Mechanical brake operating speed when the motor is running	P，S，T	0~3000	100	r/min
50	Speed limit during torque control	T	0~5000	3600*	r/min
51	Dynamic electronic gears are effective	P	0~1	0	
52	Second position command pulse frequency division molecule	P	1~32767	1	
53	Low 4-bit input terminal forced on control word	P，S，T	0000~1111	0000	Binary
54	High 4-bit input terminal forced on control word	P，S，T	0000~1111	0000	Binary
55	Low 4-bit input terminal inversion control word	P，S，T	0000~1111	0000	Binary
56	High 4-bit input terminal inversion control word	P，S，T	0000~1111	0000	Binary
57	Output terminal inversion control word	P，S，T	0000~1111	0000	Binary
58	Input terminal debounce time constant	P，S，T	1~1000	16	0.1ms

59	Demo run	P，S	0~1	0	
60	Encoder output pulse frequency division molecule	P，S，T	1～31	1	
61	Encoder output pulse division denominator	P，S，T	1～31	1	
62	Encoder output b pulse phase	P，S，T	0～1	0	
63	Encoder output z pulse phase	P，S，T	0～1	0	
64	Encoder output z pulse width	P，S，T	0～15	0	
68	Analog speed command dead zone 1	S	0～13000	0	mv
69	Analog speed command dead zone 2	S	-13000～0	0	mv

4.2 Detailed parameters

Table 4.2 Detailed user parameter content

Serial number	name	Features	Parameter range
0	password	● Used to prevent parameters from being modified by mistake.In general, when you need to set parameters, first set this parameter to the required password, and then set the parameters.After debugging, set this parameter to 0 at the end to ensure that the parameters will not be modified by mistake. ● The password is divided into levels, corresponding to user parameters, system parameters and all parameters. ● To change the model code parameter (pa1), you must use the model code password. Other parameters cannot be modified. ● The user password is 315. ● The model code password is 385.	0~9999
1	Model code	● Corresponds to the same series of drivers and motors of different power levels. ● The default values of the parameters corresponding to different model codes are different. When using the function of restoring default parameters, the correctness of this parameter must be guaranteed. ● When the eeprom alarm (No. 20) appears, after repairing, you must reset this parameter and then restore the default parameters.Failure to do so will result in an abnormal or damaged drive. ● When modifying this parameter, the password pa0 is first set to 385 to modify this parameter. ● The detailed meaning of the parameters can be found in section 8.4. ● Refer to Section 7.13.1 for the operation of restoring the factory default parameters.	0~51
2	Software version	You can view the software version number, but you cannot modify it.	*

Serial number	name	Features	Parameter range
3	Initial display state	Select the display status of the display after the drive is powered on. 0: display the motor speed; 1: Display the current position low 5 digits; 2: Display the current position is 5 digits high; 3: Display position command (command pulse accumulation amount) is 5 digits lower; 4: Display position command (command pulse accumulation amount) is 5 digits high; 5: The display position deviation is 5 digits lower; 6: The display position deviation is 5 digits high; 7: Display motor torque; 8: display motor current; 9: display linear speed; 10: display control mode; 11: Display the position command pulse frequency; 12: Display speed command; 13: Display a torque command; 14: Display the absolute position of the rotor in one revolution; 15: Display the status of the input terminal; 16: Display the status of the output terminal; 17: display an encoder input signal; 18: Display the running status; 19: Display an alarm code; 20: Reserved.	0~20

Serial number	name	Features	Parameter range
4	Control method selection	● This parameter sets the drive control method: 0: position control mode; 1: speed control mode; 2: trial operation control mode; 3: jog control mode; 4: encoder zeroing mode; 5: Open loop operation mode (for testing motors and encoders); 6: Torque control mode. ● In the position control mode, the position command is input from the pulse input port. ● Speed control mode, speed command input from input terminal or analog input, determined by parameter [inside and outside speed command selection] (pa22).When using internal speed, the combination of sc1 and sc2 is used to select different internal speeds: Sc1 off, sc2 off : internal speed 1 sc1 on, sc2 off : internal speed 2 sc1 off, sc2 on : internal speed 3 sc1 on, sc2 on : internal speed 4 ● Test run control mode, speed command input from the keyboard, used to test the drive and motor. ● Jog control mode, that is, jog mode, after entering jog operation, press ↑ key and hold, the motor runs at jog speed, release button, motor stops, keep zero speed; press ↓ key and hold, motor press jog speed Run in reverse, release the button, the motor stops and keeps at zero speed. ● The encoder zero adjustment mode is used to adjust the encoder zero point of the motor factory.	0~6
5	Speed proportional gain	● Set the proportional gain of the speed loop regulator. ● The larger the setting, the higher the gain and the greater the stiffness.The parameter values are determined according to the specific servo drive system model and load conditions.In general, the larger the load inertia, the larger the set value. ● Under the condition that the system does not oscillate, try to set it larger.	5~2000Hz

6	Speed integral time constant	● Set the integral time constant of the speed loop regulator. ● The smaller the setting value, the faster the integration speed, the stronger the system resistance deviation, that is, the greater the stiffness, but it is too small to produce overshoot.	1~1000ms

Serial number	name	Features	Parameter range
7	Torque filter	● Set the torque command filter characteristics. ● Used to suppress the resonance caused by the torque. ● The smaller the value, the lower the cutoff frequency, and the smaller the vibration and noise generated by the motor.If the load inertia is large, the set value can be appropriately reduced.The value is too small, causing the response to slow down and may cause oscillation. ● The larger the value, the higher the cutoff frequency and the faster the response.If you need higher The torque response can be increased by the set value.	20~500%
8	Speed detection filter	● Set the speed detection filter characteristics. ● The smaller the value, the lower the cutoff frequency and the less noise the motor produces.If the load inertia is large, the set value can be appropriately reduced.The value is too small, causing the response to slow down and may cause oscillation. ● The larger the value, the higher the cutoff frequency and the faster the speed feedback response.in case A higher speed response is required, and the set value can be appropriately increased.	20~500%
9	Position proportional gain	● Set the proportional gain of the position loop regulator. ● The larger the setting value, the higher the gain, the greater the stiffness, and the smaller the position lag amount under the same frequency command pulse condition.However, too large a value may cause oscillation or overshoot. ● The parameter values are based on the specific servo drive system model and load conditions. determine.	1~1000 /s
10	Position feed forward gain	● Set the feed forward gain of the position loop. ● When set to 100%, it means that the position hysteresis is always 0 at the command pulse of any frequency. ● The feedforward gain of the position loop increases, and the high-speed response characteristic of the control system increases, but the position loop of the system is unstable and oscillates easily. ● Unless a high response characteristic is required, the feedforward gain of the position loop is usually 0。	0~100%
11	Position feedforward filter cutoff frequency	● Set the low-pass filter cutoff frequency of the position loop feed forward. ● The purpose of this filter is to increase the stability of the composite position control.	1~1200Hz

No .	Name	Function	Parameter range
12	Position command pulse	● Set the division frequency (electronic gear) of the position command pulse ● In the position control mode, by setting the parameters of PA12 and PA13 It can be easily matched with various pulse sources to achieve user ideals (Control resolution (angle/pulse ● $P \times G = N \times C \times 4$ P: the number of pulses of the input command G: electronic gear ratio $G = \frac{\text{Frequency division molecule}}{\text{Frequency division denominator}}$ N: Number of motor revolutions C: .Photoelectric encoder line / turn, the system C = 2500 ● 〖Example〗 When the input command pulse is 6000, the servo motor rotates 1 circle $G = \frac{N \times C \times 4}{P} = \frac{1 \times 2500 \times 4}{6000} = \frac{5}{3}$ .Then the parameter PA12 is set to 5 and PA13 is set to 3 ● The recommended range of electronic gear ratio is $\frac{1}{50} \le G \le 50$	32767~1
13		See parameter PA12	32767~1
14	Position command pulse Input mode	● Set the input form of the position command pulse. ● The parameter is set to one of three input methods: 0: pulse + symbol; 1: CCW pulse / CW pulse; 2: Two-phase quadrature pulse input. ● CCW is viewed from the axial direction of the servo motor and rotates counterclockwise. Defined as positive. ● CW is viewed from the axial direction of the servo motor and rotates clockwise. Righteousness is reverse.	2~0
15	Position command pulse Reverse direction	Set as 0: normal; 1: The position command pulse direction is reversed.	1~0

NO.	NAME	Features	PA-RAM-ETER RANGE
16	Positioning completion Wai	• Set the positioning completion pulse range under position control. • This parameter provides the drive to determine whether the position is completed in the position control mode. The basis for positioning. When the number of remaining pulses in the position deviation counter is less than Or equal to the set value of this parameter, the drive thinks that the positioning is completed, Bit completion signal COIN ON, otherwise COIN OFF. • In the position control mode, the positioning completion signal COIN is outputted in When it controls the mode, the output speed reaches the signal SCMP.	
17	Position error test Measuring range	• Set the position out of tolerance alarm detection range. • In the position control mode, when the count value of the position deviation counter exceeds When this parameter is used, the servo drive gives a position error alarm.	
18	Location error Invalid	**SET AS** 0: The position over tolerance alarm detection is valid; 1: The position error detection is invalid, and the detection position error is stopped.	0~1
19	Position command flat Sliding filter	• Smoothing the command pulse, with exponential acceleration and deceleration, The value represents the time constant. • The filter does not lose input pulses, but there is an instruction delay. • This filter is used for 1) The upper controller has no acceleration/deceleration function; 2) The electronic gear is multiplied by a large frequency (>10); 3) The command frequency is low. • Stepping jumps and unevenness occur when the motor is running. • When set to 0, the filter does not work.	

20	Drive prohibited Invalid	**SET AS** 0: CCW, CW input prohibition is valid. When CCW drive disable switch When (FSTP) is ON, the CCW driver is allowed; when the CCW driver is disabled When the switch (FSTP) is OFF, the CCW direction torque remains at 0; CW The same reason. If the CCW and CW drivers are disabled, they will be driven. It is forbidden to input an error alarm. 1: Cancel CCW, CW input is prohibited. Regardless of CCW, CW drive is prohibited The state of the switch, CCW, CW drive are allowed. At the same time, if CCW, CW drive disable is OFF, and drive disable is not generated. Enter the error alarm.	0~1
21	JOG running speed degree	Set the running speed of the JOG operation.	
22	Internal and external speed Make choice	**Set as** 0: The speed command is taken from the internal speed; 1: The speed command is taken from an external analog input; The drive with analog function can be set to “0” or “1” without A drive with analog function can only be set to “0”.	0~1
23	Maximum speed limit system	• Set the maximum speed limit of the servo motor. • Independent of the direction of rotation. • If the set value exceeds the rated speed, the actual maximum speed limit is rated speed.	
24	Internal speed 1	• Set the internal speed 1. • In the speed control mode, when SC1 OFF, SC2 OFF, select Internal speed 1 is used as a speed command.	
25	Internal speed 2	• Set the internal speed 3. • In the speed control mode, when SC1 is OFF and SC2 is ON, the selection is within Speed 3 as a speed command.	
26	Internal speed 3	• Set the internal speed 3. • In the speed control mode, when SC1 is OFF and SC2 is ON, the selection is within Speed 3 as a speed command.	
27	Internal speed 4	• Set the internal speed 4. • In the speed control mode, when SC1 ON, SC2 ON, select within Speed 4 as a speed command.	

<table>
<tr><td>28</td><td>Arrival speed</td><td>• Set the arrival speed.
• In the non-position control mode, if the motor speed exceeds the set value,
Then SCMP ON, otherwise SCMP OFF.
• In the position control mode, this parameter is not used.
• Independent of the direction of rotation.
• The comparator has hysteresis characteristics.</td><td></td></tr>
<tr><td>29</td><td>Analog torque
Command input increase
beneficial</td><td>• Set between the analog torque input voltage and the actual running torque of the motor Proportional relationship;
• The unit of set value is 0.1V/100%;
• The default value is 30, corresponding to 3V/100%, that is, input 3V voltage is generated.
100% rated torque.</td><td></td></tr>
<tr><td>30</td><td>User torque
Alarm value</td><td>• Set the user torque overload value, which is the percentage of rated torque. The moment limit value is not divided, and the forward and reverse directions are protected;
• In the case of PA31>9, when the motor torque is >PA30, duration >PA31
In the case, the drive alarms, the alarm number is Err-29, and the motor stops.
After the alarm is generated, the drive must be powered back on to clear the alarm.</td><td>1~300</td></tr>
<tr><td>31</td><td>User torque
Alarm detection
time</td><td>• User torque overload detection time, in milliseconds,
Detection time = parameter value × 0.1;
• When set to 0~9, the user torque overload alarm function is disabled;
• In general, this parameter is set to 0.</td><td></td></tr>
<tr><td>32</td><td>Control mode
Change permission</td><td>0: Switching is not allowed.
1: Allow switching. Use ALRS (alarm clear) input to switch, the original alarm
Clear function disabled:
<table><tr><th></th><th></th><th></th></tr><tr><td>0</td><td>OFF</td><td>Position</td></tr><tr><td></td><td>ON</td><td>speed</td></tr><tr><td>1</td><td>OFF</td><td>Speed</td></tr><tr><td></td><td>ON</td><td>Torque</td></tr><tr><td>6</td><td>OFF</td><td>Torque</td></tr><tr><td></td><td>ON</td><td>Position</td></tr></table></td><td>0~1</td></tr>
<tr><td>33</td><td>Analog torque
Command input
Reversal</td><td>• Reverse the polarity of the analog torque input.
• When set to 0, the analog torque command is positive and the torque direction is CCW; When set to 1, the analog speed command is positive, torque The direction is CW.</td><td>0~1</td></tr>
</table>

34	Internal CCW Torque limit	• Set the internal torque limit value of the servo motor in the CCW direction. • The set value is a percentage of the rated torque, for example, set to the rated torque 2 times, the setting value is 200. • This limit is valid at all times. If the set value exceeds the maximum overload capacity allowed by the system, the actual transfer The moment is limited to the maximum overload capacity allowed by the system.	
35	Internal CW turn Moment limit	• Set the internal torque limit value of the servo motor in the CW direction. • The set value is a percentage of the rated torque, for example, set to the rated torque 2 times, the setting value is -200. • This limit is valid at all times. • If the set value exceeds the maximum overload capacity allowed by the system, the actual transfer The moment is limited to the maximum overload capacity allowed by the system.	
36	External CCW Torque limit	• Set the external torque limit value of the servo motor in the CCW direction. • The set value is a percentage of the rated torque, for example, set to the rated torque 1 time, the setting value is 100. • This limit is only available when the CCW torque limit input terminal (FIL) is ON. The system is effective. • When the limit is valid, the actual torque limit is the maximum overload allowed by the system. Capacity, internal CCW torque limit, external CCW torque limit three The minimum value among the people.	
37	External CW turn Moment limit	• Set the external torque limit value of the servo motor in the CW direction. • The set value is a percentage of the rated torque, for example, set to the rated torque 1 time, the setting value is -100. • This limit is only available when the CW torque limit input terminal (RIL) is ON. The system is effective. • When the limit is valid, the actual torque limit is the maximum overload allowed by the system. Capacity, internal CW torque limit, external CW torque limit The minimum value of the absolute value in .	

38	Speed trial Line, JOG Row torque limit	• Set the torque limit value in the speed trial run and JOG operation mode. • Independent of the direction of rotation, it is effective in both directions. • The set value is a percentage of the rated torque, for example, set to the rated torque 1 time, the setting value is 100. • Internal and external torque limits are still valid.	
39	Analog torque Instruction zero offset Pay	The amount of zero offset compensation for the analog torque input.	
40	Acceleration time Number	• The set value is the acceleration time of the motor from 0 to 1000 r/min. • The acceleration and deceleration characteristics are linear. • Only for speed control mode, position control mode is invalid. • If the drive is used in combination with an external position loop, this parameter should be set to 0.	
41	Acceleration time number	• The set value is the acceleration time of the motor from 0 to 1000 r/min. • The acceleration and deceleration characteristics are linear. • Only for speed control mode, position control mode is invalid. • If the drive is used in combination with an external position loop, this parameter should be set to 0.	
42	S type acceleration and deceleration Time constant	• Set the S-type acceleration/deceleration curve part of the time to make the motor start and stop smoothly.	
43	Analog speed Command input increase beneficial	Set the ratio between the analog speed input voltage and the actual running speed of the motor relationship.	
44	Analog speed Command direction anti-	• Reverse the polarity of the analog speed input. • When set to 0, the analog speed command is positive and the speed direction is CCW; • When set to 1, the analog speed command is positive and the speed direction is CW.	0~1
45	Analog speed Instruction zero offset Pay	The amount of zero offset compensation for the analog speed input.	
46	Analog speed Instruction filter	• Low-pass filter for analog speed input. • The larger the setting, the faster the response to the speed input analog, the signal noise • The louder the influence; the smaller the setting, the slower the response, the signal noise • The smaller the ringing.	

47	When the motor is stopped Mechanical brake Action setting	• Define the action from the mechanical brake during motor stall (output terminal BRK The delay time from ON to OFF) to the motor current cutoff; • This parameter should not be less than the mechanical brake delay time (Tb) to avoid electricity Small displacement of the machine or the workpiece falls • See Figure 7.5 for the timing.	0~200 ×10ms
48	When the motor is running Mechanical brake Action setting	• Define the motor current cut to the mechanical brake during motor operation the delay time (output terminal BRK changes from ON to OFF). • This parameter is to decelerate the motor from high speed rotation to low speed. Then actuate the mechanical brake to avoid damaging the brake. • The actual operating time is required for PA48 or motor deceleration to PA49 value Time, the minimum of the two. • l See Figure 7.6 for the corresponding timing.	0~200 ×10ms
49	When the motor is running Mechanical brake Speed of action	• Define the motor current cut to the mechanical brake during motor operation The speed value of the output terminal BRK from ON to OFF. • The actual operating time is required for PA48 or motor deceleration to PA49 value Time, the minimum of the two. • See Figure 7.5 for the timing.	
50	Torque control Speed limit	• During torque control, the motor running speed is limited to this parameter; • It can prevent overspeed in light loads.	
51	Dynamic electronic tooth Effective round	• Set to 0, the dynamic electronic gear is invalid, the function of the input terminal INH The command pulse is disabled. • Set to 1, dynamic electronic gear is valid, input terminal INH function It is an electronic gear switch. When the INH terminal is OFF, input electronic teeth The wheel is PA12/PA13; when the INH terminal is ON, the input electronic gear PA52/PA13; change the electronic gear ratio by controlling the INH terminal Example value.	0~1
52	Second position Pulse division Molecule	• The division frequency (electronic gear) of the second position command pulse is set. • The dynamic electronic gear must be set with the parameter PA51=1, at this time input Terminal INH (command pulse inhibit) function is changed to electronic gear switching Enter the control terminal.	

<table>
<tr>
<td>53</td>
<td>Low 4 digit input
Terminal forcing
ON control word</td>
<td>

Set the input terminal internal forced ON to be valid. Terminals that are not forced ON, Need to be connected to the external connection ON/OFF, the terminal that has been forced ON, It is not necessary to connect externally, and the inside of the drive is automatically turned ON.
Expressed as a 4-bit binary number, this bit is 0 to represent the input terminal Do not force ON, 1 means the input terminal of the delegate is forced ON. Binary The input terminals represented by the numbers are as follows:

<table>
<tr><td>3</td><td>2</td><td>1</td><td>0</td></tr>
<tr><td>RSTP</td><td>FSTP</td><td>ALRS</td><td>SON</td></tr>
</table>
SON: Servo enable;
ALRS: alarm clearing;
FSTP: CCW driver is prohibited;
RSTP: CW drive is disabled.
</td>
<td></td>
</tr>
<tr>
<td>54</td>
<td>High 4-bit input
Terminal forcing
ON control word</td>
<td>

Set the input terminal to be inverted. Terminals that are not inverted, when the switch is closed Effective, the switch is invalid when it is open; the reversed terminal is not when the switch is closed Effective, effective when the switch is off.
Expressed as a 4-bit binary number, this bit is 0 to represent the input terminal If not inverted, the input terminal represented by 1 means negated. Binary generation The input terminals of the table are as follows:

<table>
<tr><td>3</td><td>2</td><td>1</td><td>0</td></tr>
<tr><td>RIL</td><td>FIL</td><td>INH/
SC2</td><td>CLES/SC1/
ZEROSPD</td></tr>
</table>
CLE/SC1/ZEROSPD: deviation counter clear/speed selection 1/zero speed clamp Bit
INH/SC2: command pulse inhibit / speed selection 2;
FIL: CCW torque limit;
RIL: CW torque limit.
</td>
<td></td>
</tr>
</table>

<table>
<tr>
<td>55</td>
<td>Low 4 digit input

Terminal counter control

Word</td>
<td>

Set the input terminal to be inverted. Terminals that are not inverted, when the switch is closed Effective, the switch is invalid when it is open; the reversed terminal is not when the switch is closed Effective, effective when the switch is off.
Expressed as a 4-bit binary number, this bit is 0 to represent the input terminal If not inverted, the input terminal represented by 1 means negated. Binary generation The input terminals of the table are as follows:

<table>
<tr><td>3</td><td>2</td><td>1</td><td>0</td></tr>
<tr><td></td><td></td><td>ALRS</td><td>SON</td></tr>
</table>
SON: Servo enable;

ALRS: alarm clearing;

FSTP: CCW driver is prohibited;

RSTP: CW drive is disabled.
</td>
<td></td>
</tr>
<tr>
<td>56</td>
<td>High 4-bit input

Terminal counter control

Word</td>
<td>

Set the input terminal to be inverted. Terminals that are not inverted, when the switch is closed

Effective, the switch is invalid when it is open; the reversed terminal is not when the switch is closed

Effective, effective when the switch is off.
It is represented by a 4-digit binary number. This bit is 0 to represent the input terminal. If not inverted, the input terminal represented by 1 means negated. Binary generation The input terminals of the table are as follows:

<table>
<tr><td>3</td><td>2</td><td>1</td><td>0</td></tr>
<tr><td>RIL</td><td>FIL</td><td>INH/
SC2</td><td>CLE/SC1/
ZEROSPD</td></tr>
</table>
CLE/SC1/ZEROSPD: deviation counter clear/speed selection 1/zero speed clamp

Bit

INH/SC2: command pulse inhibit / speed selection 2;

FIL: CCW torque limit;

RIL: CW torque limit.
</td>
<td></td>
</tr>
</table>

<table>
<tr><td>57</td><td>Output terminal
Anti-control word</td><td>

- Set the output terminal to be inverted. Inverted terminal, on and off definition Just the opposite of the standard definition;
- It is represented by a 4-bit binary number. This bit is 0 to represent the output terminal. If not inverted, the output terminal represented by 1 means negated. Binary generation The input terminals of the table are as follows:

<table>
<tr><td>3</td><td>2</td><td>1</td><td>0</td></tr>
<tr><td>BRK</td><td></td><td>ALM</td><td>SRDY</td></tr>
</table>

SRDY: The servo is ready;

ALM: servo alarm;

COIN: Positioning completed / speed reached;

BRK: Mechanical brake release.

</td><td></td></tr>
<tr><td>58</td><td>Io input terminal
Debounce time
constant</td><td>

- Debounce filtering time on the input terminal;
- The smaller the value, the faster the terminal input response;
- The higher the value, the better the interference immunity of the terminal input, but the response is slower.

</td><td></td></tr>
<tr><td>59</td><td>Demo run</td><td>Test-specific.</td><td>0~1</td></tr>
</table>

60	Encoder output Pulse frequency division Child	• The encoder outputs an electronic gear for dividing the encoder aaaasdfpulse. Change the pulse resolution sent to the host computer. • It can only be divided, not multiplier. The parameter 60 ≤ parameter 61 must be set. • If set to parameter 60=1 and parameter 61=1, the crossover function will be Cancel, the AB signal is straight through. • The frequency division can change the number of encoder lines output (only smaller than the motor encoder) The number of lines) is convenient for connection with the host device. Especially in the upper device receiving When the maximum frequency of the pulse is limited, the encoder pulse can be reduced after the frequency division setting frequency. • If the motor encoder uses a C-line encoder, the output encoder line number for $\frac{\text{parameter } 60}{\text{parameter } 61} \times C$ For example, if you use a 2500 line encoder, the number of output encoder lines is $\frac{\text{parameter } 60}{\text{parameter } 61} \times 2500$ • The number of output encoder lines can be a fraction. 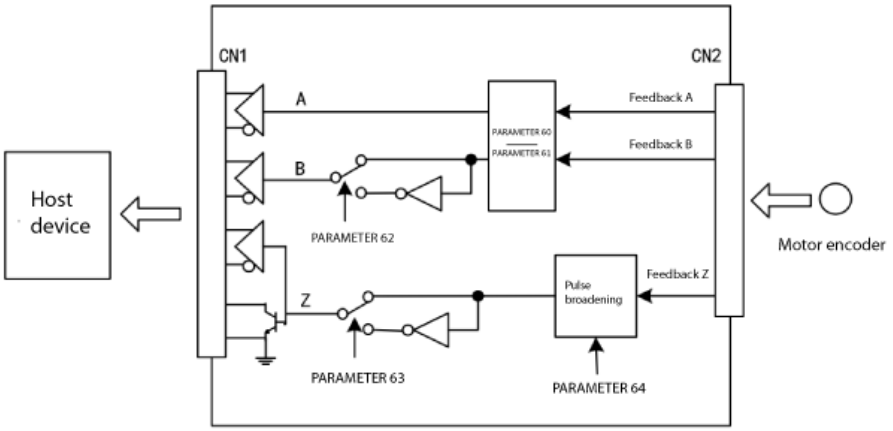 	1～31
61	Encoder output Pulse frequency division mother	Refer to the description of parameter 60.	1～31

62	Encoder output B pulse phase	Parameter meaning: 0: in phase 1: inversion • This parameter can adjust the phase relationship between the B phase signal and the A phase signal: 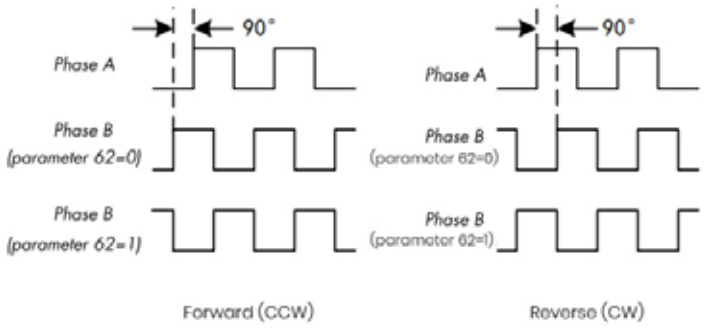 	0～1
63	Encoder output Z pulse phase	• Parameter meaning: **0: in phase** **1: inversion**	0～1

64	Encoder output Z pulse width	• When the upper device cannot capture the narrow Z pulse, it can enter the Z pulse. Line width, parameter meaning: 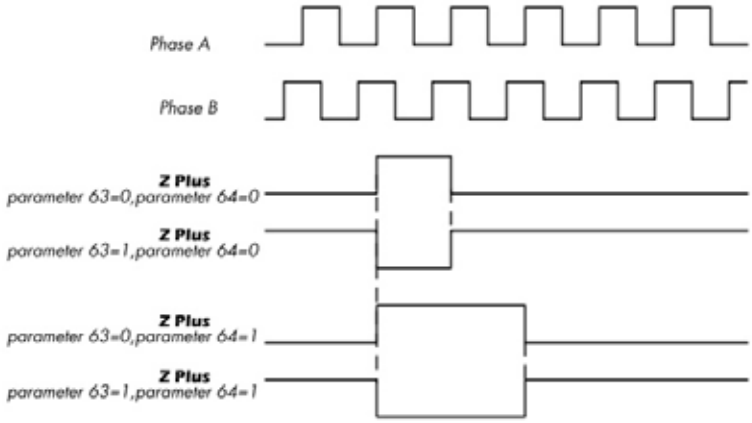 	0～15
68	Analog speed Dead zone 1	• The input voltage is between dead zone 2 (parameter 69) ~ dead zone 1 (parameter 68) The time instruction is forced to 0.	0

Chapter 5 Protection Features

5.1 Alarm list

Table 5.1 Alarm List

Alarm code	Alarm name	content
--	normal	
1	Speeding	Servo motor speed exceeds the set value
2	Main circuit overvoltage	Main circuit power supply voltage is too high
3	Main circuit undervoltage	Main circuit power supply voltage is too low
4	Location out of tolerance	The value of the position deviation counter exceeds the set value
5	Motor overheating	Motor temperature is too high
6	Speed amplifier saturation fault	Speed regulator is saturated for a long time
7	Drive inhibit exception	Ccw, cw drive disable input is off
8	Position deviation counter overflow	The absolute value of the value of the position deviation counter exceeds 2^{30}
9	Encoder failure	Encoder signal error
10	Control power supply undervoltage	Low control power
11	Ipm module failure	Ipm intelligent module failure
12	Overcurrent	Motor current is too large
13	Overload	Servo drive and motor overload (instantaneous overheating)
14	Brake failure	Brake circuit failure
15	Encoder count error	Encoder count is abnormal
16	Motor thermal overload	Motor electric heating value exceeds the set value (I^2t detection)
17	Brake average power overload	Brake long-term average load is too large
19	Hot reset	The system is warmed down
20	Eeprom error	Eeprom error
21	U4 error	U4 error
22	Reserved	
23	U6 chip error	U6 chip or current sensor error
29	User torque overload alarm	Motor load exceeds user-set value and duration
30	Encoder z pulse loss	Encoder z pulse error
31	Encoder uvw signal error	Encoder uvw signal error or does not match encoder

32	Encoder uvw signal is illegal coding	Uvw signal has full high level or full low level
33	Provincial line encoder signal error	No high-impedance state in power-up sequence

5.2 Alarm processing method

Table 5.2 Alarm Processing Methods

Alarm code	Alarm name	Operating status	the reason	Approach
1	Speeding	Switch on control Appears when power	● Control board failure. ● The encoder is faulty.	● Replace the servo drive. ● Replace the servo motor.
		Appears during motor operation	The input command pulse frequency is too high.	Set the input command pulse correctly.
			Acceleration/deceleration time constant is too small to make the speed The overshoot is too large.	Increase the acceleration/deceleration time constant.
			The input electronic gear ratio is too large.	Set it up correctly.
			The encoder is faulty.	Replace the servo motor.
			Defective encoder cable.	Replace the encoder cable.
			The servo system is unstable, causing overshoot.	● Reset the relevant gain. ● If the gain cannot be set to a suitable value, reduce the load moment of inertia ratio.
		Appears when the motor starts up	The load inertia is too large.	● Reduce the load inertia. ● Replace high power drives and motors.
			Encoder zero error.	● Replace the servo motor. ● Please re-adjust the encoder zero.
			● The motor u, v, w leads are connected incorrectly. ● The encoder cable leads are connected incorrectly.	● Wired correctly.

Alarm code	Alarm name	Operating status	the reason	Approach
2	Main circuit overvoltage	When the control power is turned on Now	The board is faulty.	Replace the servo drive.
		Switch on the mains Appear when source	● The power supply voltage is too high. ● The power supply voltage waveform is abnormal.	Check the power supply.
		Appears during motor operation	The brake resistor wiring is broken.	Rewire.
			● The brake transistor is damaged. ● The internal braking resistor is damaged.	Replace the servo drive.
			The brake circuit capacity is not enough.	● Reduce the start and stop frequency. ● Increase the acceleration/deceleration time constant. ● Reduce the torque limit value. ● Reduce the load inertia. ● Replace high power drives and motors.
3	Main circuit undervoltage	Appears when the main power is turned on	● The board is faulty. ● The power supply is damaged. ● The soft start circuit is faulty. ● The rectifier is damaged.	Replace the servo drive.
			● The power supply voltage is low. ● Temporary power outage for more than 20ms.	Check the power supply.
		Out of the motor Now	● The power supply capacity is not enough. ● Instantaneous power loss.	Check the power supply.
			The radiator is overheated.	Check the load.

Alarm code	Alarm name	Operating status	the reason	Approach
4	Location out of tolerance	When the control power is turned on Now	The board is faulty.	Replace the servo drive.
		Turn on the main power and control line, input the command pulse, the motor does not rotate Or reverse	● The motor u, v, w leads are connected incorrectly. ● The encoder cable leads are connected incorrectly.	Wired correctly.
			● Encoder zero point change. ● The encoder is faulty.	● Re-adjust the encoder zero. ● Replace the servo motor.
		Appears during motor operation	The set position error detection range is too small.	Increase the position error detection range.
			The position proportional gain is too small.	Increase the gain.
			Insufficient torque.	● Check the torque limit value. ● Reduce the load capacity. ● Replace high power drives and motors.
			The command pulse frequency is too high.	Reduce the frequency.
			Encoder zero point change.	Re-adjust the encoder zero.
5	Motor overheating	Appears when the control power is turned on	● The board is faulty.	Replace the servo drive.
			● The cable is broken. ● The motor internal temperature relay is damaged.	● Check the cable. ● Check the motor.
		Appears during motor operation	The motor is overloaded.	● Reduce the load. ● Reduce the start and stop frequency. ● Reduce the torque limit value. ● Reduce the relevant gain. ● Replace high power drives and motors.
			Internal motor failure.	Replace the servo motor.

6	Speed amplifier saturation fault	Appears during motor operation	The motor is mechanically stuck.	Check the load mechanical part.
			The load is too large.	● Reduce the load. ● Replace high power drives and motors.
7	Drive prohibited abnormal		Ccw, cw drive disable input terminals disconnect.	Check the wiring.

Alarm code	Alarm name	Operating status	the reason	Approach
8	Position deviation counter overflow		● The motor is mechanically stuck. ● The input command pulse is abnormal.	● Check the load mechanical part. ● Check the command pulse. ● Check if the motor is rotating according to the command pulse.
9	Encoder failure		The encoder is wired incorrectly.	Check the wiring.
			The encoder is damaged.	Replace the motor.
			Defective encoder cable.	Replace the cable.
			The encoder cable is too long, causing the encoder to be supplied The electric voltage is low.	● Shorten the cable. ● Multi-core parallel power supply.
10	Control power supply undervoltage		The input control power is low.	Check the control power.
			● Defective internal connector of the drive. ● The switching power supply is abnormal. ● The chip is damaged.	● Replace the drive. ● Check the connector. ● Check the switching power supply.
11	Ipm module failure	Switch on control Appears when power	The board is faulty.	Replace the servo drive.
		Appears during motor operation	● The supply voltage is low. ● overheat.	● Check the drive. ● Power on again. ● Replace the drive.
			Short circuit between drivers u, v, w.	Check the wiring.
			Poor grounding.	Ground properly.
			The motor insulation is damaged.	Replace the motor.
			Being disturbed.	● Increase the line filter. ● Keep away from sources of interference.
12	Overcurrent		Short circuit between drivers u, v, w.	Check the wiring.
			Poor grounding.	Ground properly.
			The motor insulation is damaged.	Replace the motor.
			The drive is damaged.	Replace the drive.

Alarm code	Alarm name	Operating status	the reason	Approach
13	Overload	When the control power is turned on Now	The board is faulty.	Replace the servo drive.
		Appears during motor operation	Exceeded rated torque operation.	● Check the load. ● Reduce the start and stop frequency. ● Reduce the torque limit value. ● Replace high power drives and motors.
			Keep the brakes open.	Check the holding brake.
			The motor oscillates unstable	● Adjust the gain. ● Increase the acceleration/deceleration time. ● Reduce the load inertia.
			● u, v, w have a phase break. ● The encoder is wired incorrectly.	Check the wiring.
14	Brake failure	When the control power is turned on Now	The board is faulty.	Replace the servo drive.
		Appears during motor operation	The brake resistor wiring is broken.	Rewire.
			● The brake transistor is damaged. ● The internal braking resistor is damaged.	Replace the servo drive.
			The brake circuit capacity is not enough.	● Reduce the start and stop frequency. ● Increase the acceleration/deceleratio n time constant. ● Reduce the torque limit value. ● Reduce the load inertia. ● Replace high power drives and motors.
			The main circuit power supply is too high.	Check the main power supply.

Alarm code	Alarm name	Operating status	the reason	Approach
15	Encoder count error		● The encoder is damaged. ● The number of encoder lines is incorrect. ● The encoder disc is damaged. ● The encoder has a false z signal (multiple z pulses in one revolution).	Replace the encoder.
			The encoder is wired incorrectly.	Check the wiring.
			Poor grounding.	● Ground properly. ● Check if the shield ground wire is connected.
16	Motor thermal overload	Switch on control Appears when power	The board is faulty.	Replace the servo drive.
			The parameter setting is incorrect.	Set the relevant parameters correctly.
		Appears during motor operation	Long-term operation exceeds rated torque.	● Check the load. ● Reduce the start and stop frequency. ● Reduce the torque limit value. ● Replace high power drives and motors.
			Poor mechanical transmission.	Check the mechanical part.
17	Brake average power overload		The input AC power is high.	Check the power supply voltage.
			Regenerative braking energy is too large.	● Reduce the start and stop frequency. ● Increase the acceleration/deceleration time. ● Reduce the torque limit value. ● Reduce the load inertia. ● Replace the larger power drive and motor.
19	Hot reset		The input control power supply is unstable.	Check the control power.
			Being disturbed.	● Increase the line filter. ● Keep away from sources of interference.

20	EEPROM error		The chip or board is damaged.	● Replace the servo drive. ● After repair, you must reset the drive model (parameter pa1) and then restore the default parameters.
21	U4 error		The chip or board is damaged.	Replace the servo drive.
23	U6 chip error		● The chip or board is damaged. ● The current sensor is damaged.	Replace the servo drive.

Alarm code	Alarm name	Operating status	the reason	Approach
29	User torque Overload alarm		● The pa30 and pa31 parameters are unreasonable. ● Unexpected large loads occur.	● Change parameters. ● Overhaul the machinery.
30	Encoder z Pulse loss		● The z pulse does not exist and the encoder is damaged. ● Bad cable. ● Poor cable shielding. ● The shielded ground wire is not connected. ● The encoder interface circuit is faulty.	● Replace the encoder. ● Check the encoder interface circuit.
31	Encoder Uvw signal error		● The encoder uvw signal is corrupted. ● The encoder z signal is corrupted. ● Bad cable. ● Poor cable shielding. ● The shielded ground wire is not connected. ● The encoder interface circuit is faulty.	● Replace the encoder. ● Check the encoder interface circuit.
32	Encoder Ivw signal illegal coding		● The encoder uvw signal is corrupted. ● Bad cable. ● Poor cable shielding. ● The shielded ground wire is not connected. ● The encoder interface circuit is faulty.	● Replace the encoder. ● Check the encoder interface circuit.
33	Provincial line encoder signal wrong		● Encoder problem. ● The motor model is not set correctly.	● Replace the encoder. ● Check the wiring. ● Reset the motor model.

Chapter 6. Display and keyboard operations

The panel consists of 6 LED digital tube displays and 4 buttons ↑, ↓, ←, and Enter to display the system.
State, setting parameters, etc. The operation is a layered operation, the ,←Enter key indicates the back and forward of the hierarchy, and the Enter key has
Enter, determine the meaning,← key has the meaning of exit, cancel; ↑, ↓ key means increase, decrease the serial number or value size.
If the ↑, ↓ keys are pressed and held, there is a repeating effect, and the longer the holding time, the higher the repetition rate.
If the decimal point of the 6 digit tube or the rightmost digit tube is flashing, an alarm has occurred. POWER indicator
Lit indicates that the main power has been turned on, and the RUN indicator is lit to indicate that the motor is running.

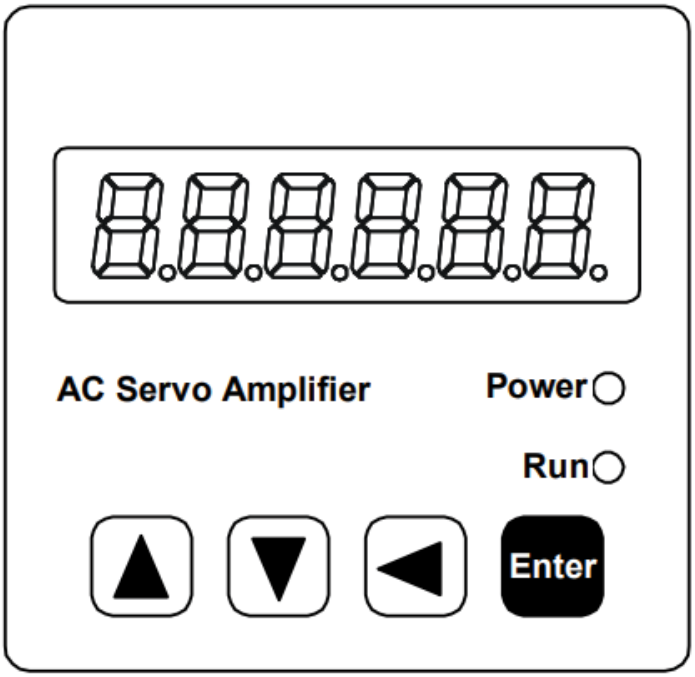

Figure 6.0 panel

6.1 Tier 1

The first layer is used to select the operation mode. There are 7 ways to change the mode with the ↑ and ↓ keys. Press the Enter key to enter the selection.
In the second layer of the fixed mode, press the ← key to return to the first layer from the second layer.

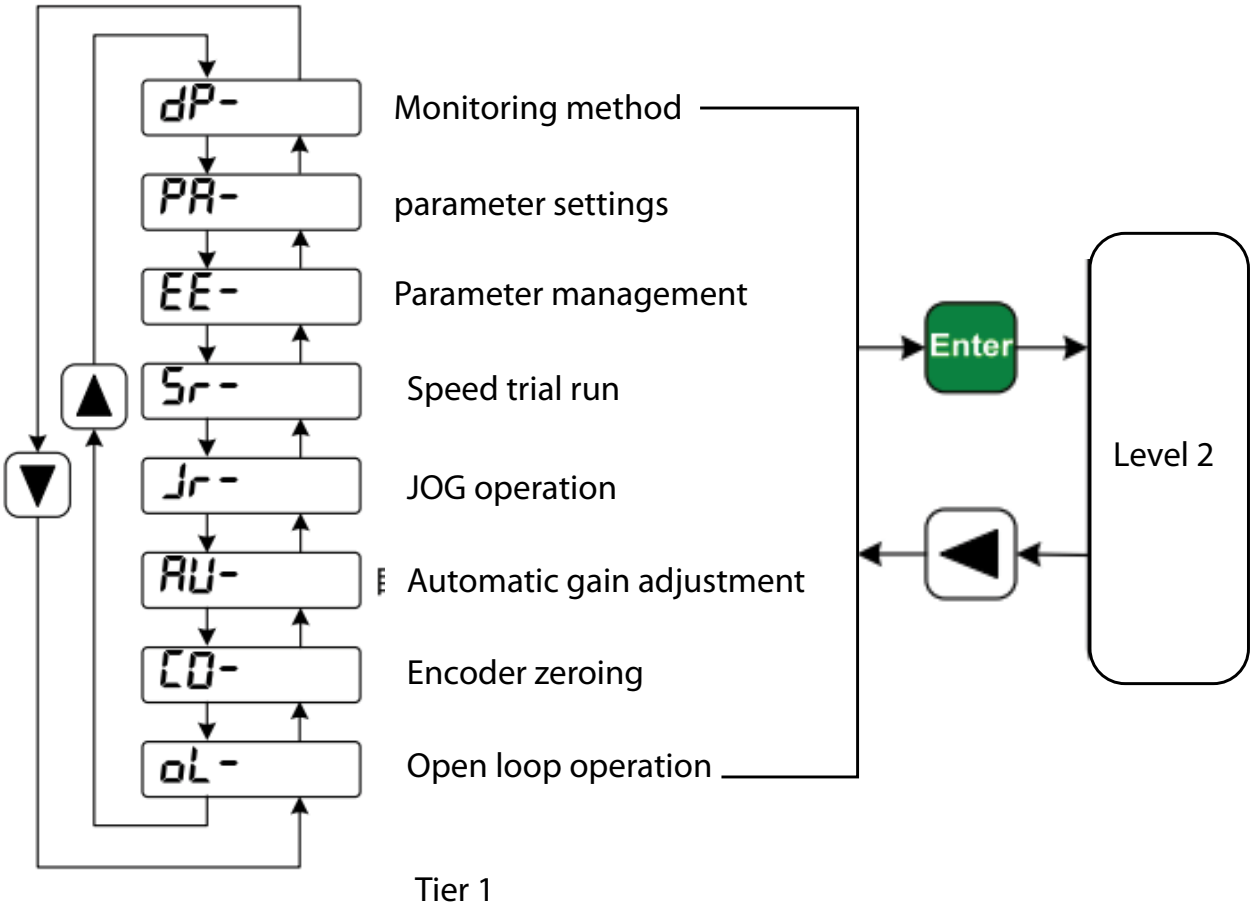

6.1 Mode Selection Operation Block Diagram

6.2 Layer 2

6.2.1 Monitoring method

Select "dP- in layer 1" " and press Enter to enter the monitoring mode. There are 21 display states, users
Use the ↑ ,↓ keys to select the desired display mode, and then press the Enter key to enter the specific display state.

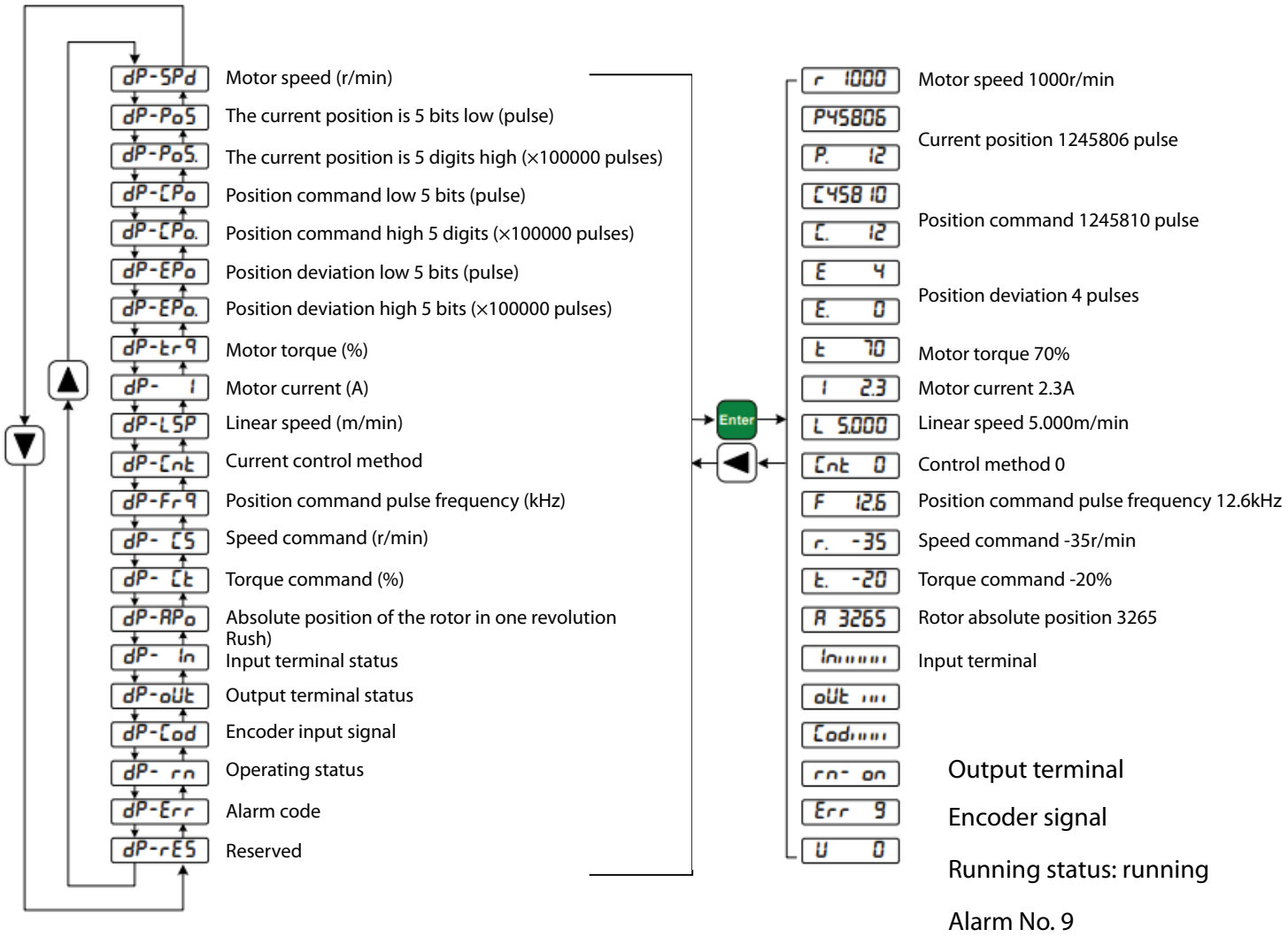

Figure 6.2 Monitoring mode operation block diagram

[Note 1] The input pulse amount is a pulse amplified by the input electronic gear.

[Note 2] The pulse unit is the internal pulse unit of the system, which is 10000 pulses/rev in this system. The pulse amount is 5 digits high +low 5 digits indicate that the calculation method is:

Pulse amount = high 5 digits x 100000 + low 5 digits

[Note 3] Control mode: 0-position control; 1-speed control; 2-speed test run; 3-JOG operation; 4-encoder adjustment
Zero; 5-open loop operation.

[Note 4] If the display number reaches 6 digits (if -12345 is displayed), the prompt character is no longer displayed.

[Note 5] The position command pulse frequency is the actual pulse frequency before the input electronic gear is amplified, the minimum unit
At 0.1 kHz, the forward direction shows a positive number and the reverse direction shows a negative number.

[Note 6] Indicates the effective value of the phase current. The calculation method of the current I is:

$$I = \sqrt{\frac{1}{3}(I_U^2 + I_V^2 + I_W^2)}$$

[Note 7] The absolute position of the rotor in one revolution indicates the position of the rotor relative to the stator in one revolution, with one revolution for one week.
Period, the range is 0 ~ 9999, this value is independent of the electronic gear ratio.

[Note 8] The input terminal is shown in Figure 6.3, the output terminal is shown in Figure 6.4, and the encoder signal is shown in Figure
6.5 is shown.

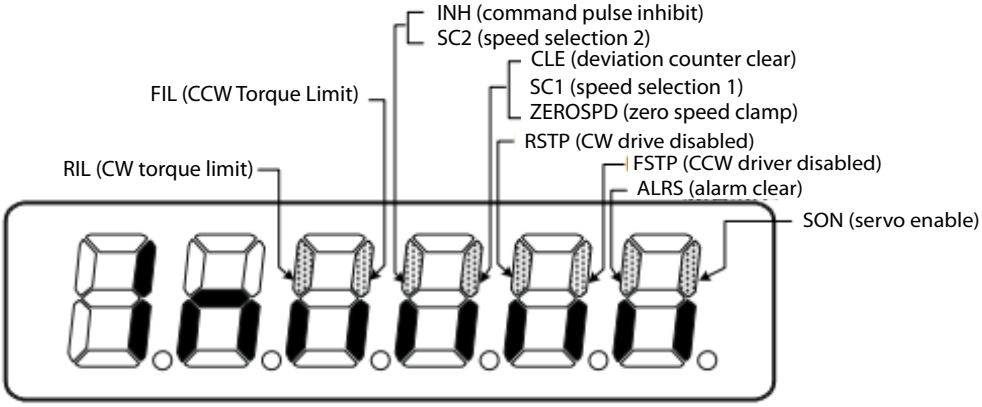

Figure 6.3 Input terminal display (stroke light is ON, OFF is OFF)

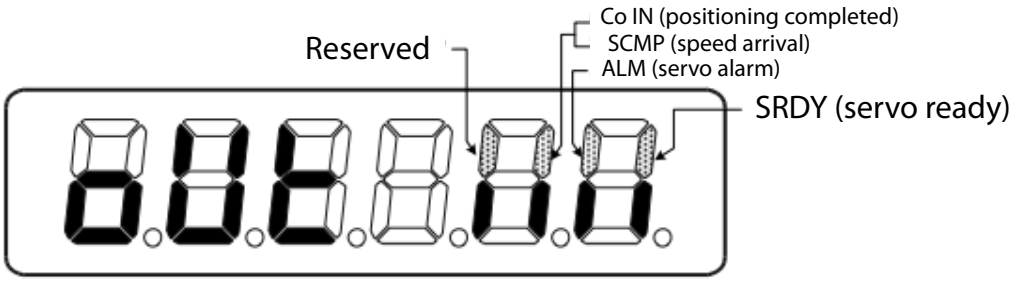

Figure 6.4 Output terminal display (stroke light is ON, OFF is OFF)

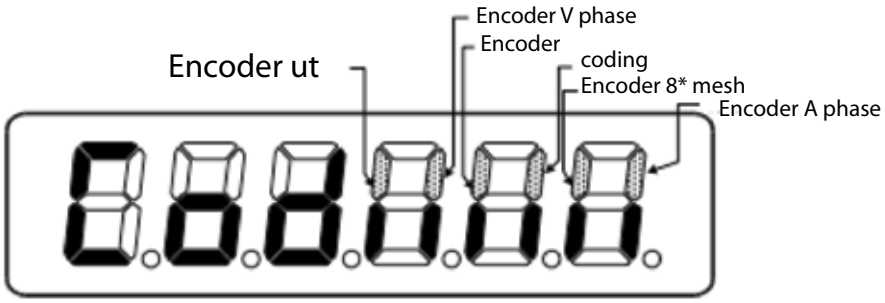

[Note 9] The operating status is expressed as:

"cn- oFF": The main circuit is not charged and the servo system is not running;

"cn- CH": The main circuit is charged and the servo system is not running (servo is not enabled or there is an alarm);

"cn- on": The main circuit is charged and the servo system is running.

[Note 10] The alarm display "Err --" indicates normal, no alarm.

6.2.2 Parameter Settings

Select "PA- " in the first layer and press Enter to enter the parameter setting mode. Use ↑, ↓ keys to select parameters
No. Press Enter to display the value of the parameter. Use the ↑ and ↓ keys to modify the parameter value. Press the ↑ or ↓ key once to enter
Increase or decrease the number 1. Press and hold the ↑ or ↓ key to increase or decrease the parameter continuously. When the parameter value is modified, the rightmost
The LED digital tube on the side is lit with a decimal point. Press Enter to confirm that the modified value is valid. At this time, the LED on the right is small.
The number is extinguished, and the modified value will be immediately reflected in the control. After that, press the ↑ or ↓ key to continue to modify the parameters.
After the change is completed, press the ← key to return to the parameter selection state. If you are not satisfied with the value being modified, do not press Enter to confirm.
Can be canceled by pressing the ← key, the parameter returns to the original value, and returns to the parameter selection state.

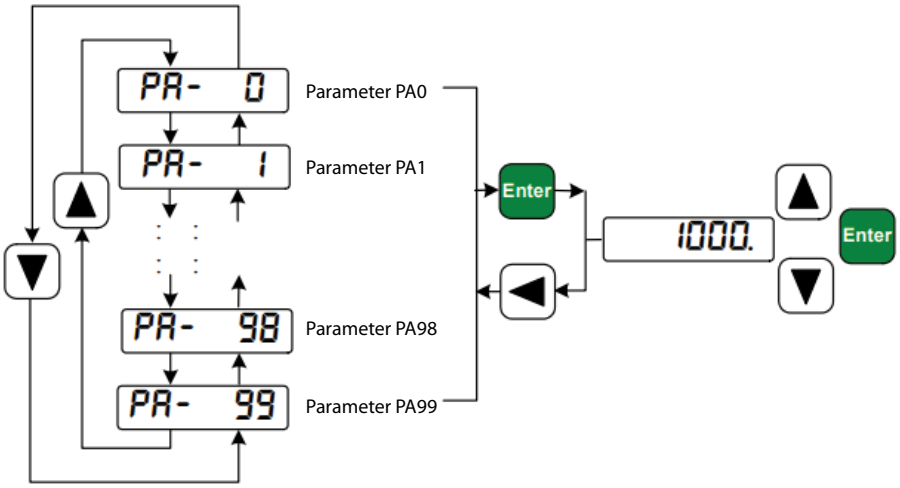

6.6 Parameter setting operation block diagram

6.2.3 Parameter Management

Parameter management mainly deals with the operation between the parameter table and the EEPROM. Select “EE- ” in the first layer and press

The Enter key enters the parameter management mode. First you need to select the operating mode. There are 3 modes, which are selected with the ↑ and ↓ keys.

Take "parameter write" as an example, select "EE-Set", and then press the Enter key for more than 3 seconds, the display shows “St Art ” means that the parameter is being written to the EEPROM. After waiting for 1~2 seconds, if the write operation is successful,

The display shows "F In ISH" and if it fails, it displays "Error ". Press ← to return to the operation mode selection. status.

In particular, when modifying the motor model code, it must be saved with EE-dEF, and other parameters of the user are used. EE-SET save.

- The **EE-SEt** parameter is written to indicate that the parameters in the parameter table are written to the parameter area of the EEPROM. User modified

  The parameter only changes the parameter value in the parameter table, and the next time the power is turned on, it will return to the original value. If you want to be permanent

  To change the parameter value, you need to perform the parameter write operation and write the parameters in the parameter table to the parameters of the EEPROM.

  In the zone, the modified parameters will be used after power-on.
- The **EE- rd** parameter reads, which reads the data of the parameter area of the EEPROM into the parameter table. This process is It is automatically executed once at power-on. At the beginning, the parameter values of the parameter table are the same as those in the parameter area of the EEPROM.

  of. However, if the user modifies the parameters, the parameter values in the parameter table will be changed, and the user is not satisfied with the modified parameters.

  Or when the parameter is disordered, the parameter reading operation is performed, and the data in the parameter area of the EEPROM can be read again to the parameter.

  In the table, it is restored to the parameter just after power-on.
- **EE-dEF** restores the default value, which means that the default values (factory values) of all parameters are read into the parameter table and written.

  In the parameter area of the EEPROM, the default parameters will be used next time. When the user confuses the parameters, it is not normal.

  When working, use this operation to restore all parameters to the factory state. Because of different drives and motors

  The default values of the parameters corresponding to the model are different. When using the default parameters, you must first ensure the model code (parameters).

  For the correctness of PA1), please refer to Section 8.4.

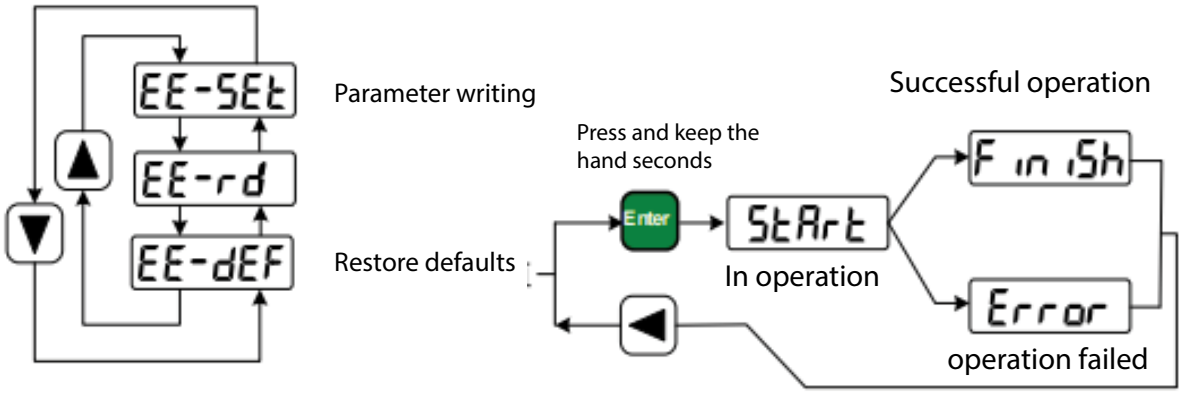

6.7 Parameter Management Operation Block Diagram

	System power on:	EEPROM parameter area	⇨	Parameters Table
EE-SEt	Parameter writing:	Parameters Table	⇨	EEPROM parameter area
EE- rd	Parameter reading	EEPROM parameter area	⇨	Parameters Table
EE-dEF	default value	Parameter default	⇨	Parameters Table EEPROM parameter area

Figure 6.8 Parameter Management Operation Meaning

6.2.4 Analog automatic zero adjustment

After using this operation, the drive automatically detects the speed analog zero offset (or torque analog zero offset) and writes the zero offset value.
Enter PA45 (or PA39) and save it to the EEPROM. Select "AU-" in the first layer and press Enter to enter
Zero operation mode.
After auto-zeroing, the user can continue to modify PA45 (or PA39) for manual zero adjustment.

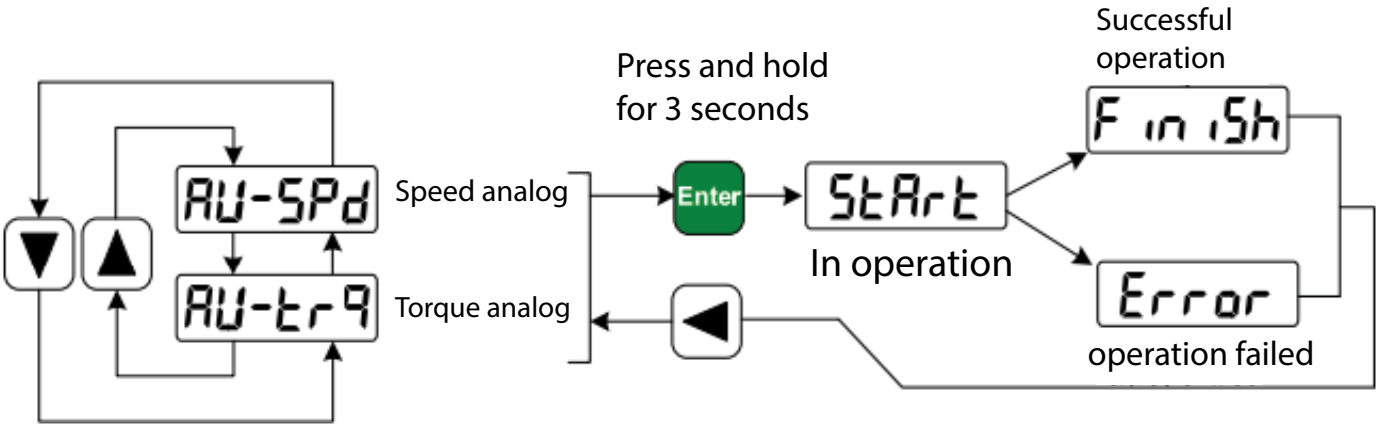

Figure 6.9 Analog automatic zeroing operation block diagram

Chapter 7 Running

7.1 Grounding

Ground the servo drive and motor reliably. To avoid electric shock, the protective ground terminal of the servo drive is
The protective ground of the control box is always on. Since the servo driver uses PWM technology to power the servo motor through the power tube
Power supply, drivers and cables may be affected by switching noise. In order to comply with EMC standards, the grounding wire is exhausted.
Possible coarse, the grounding resistance is as small as possible.

7.2 Working sequence

7.2.1 Power-on sequence

Connect the power supply to the main circuit power input terminal through the electromagnetic contactor.
2. The power supply of the control circuit r, t is connected to the main circuit power supply at the same time or before the main circuit power supply. If only the control is turned on
The power supply of the circuit, the servo ready signal (SRDY) OFF.
3. After the main circuit power is turned on, the delay is about 1.5 seconds, the servo ready signal (SRDY) is ON, and the servo can be accepted at this time.
Service enable (SON) signal, detection of servo enable is valid, base circuit is on, motor is energized, is running
status. The servo enable is detected to be invalid or there is an alarm, the base circuit is turned off, and the motor is in a free state.
4. When the servo enable is turned on with the power supply, the base circuit turns on after approximately 1.5 seconds.
Frequently turning on and off the power supply may damage the soft start circuit and the dynamic braking circuit.
It is made 5 times an hour, 30 times a day or less. If the drive or motor is over-heated, after the cause of the fault is removed,
It will take another 30 minutes to cool down before you can turn it on again.

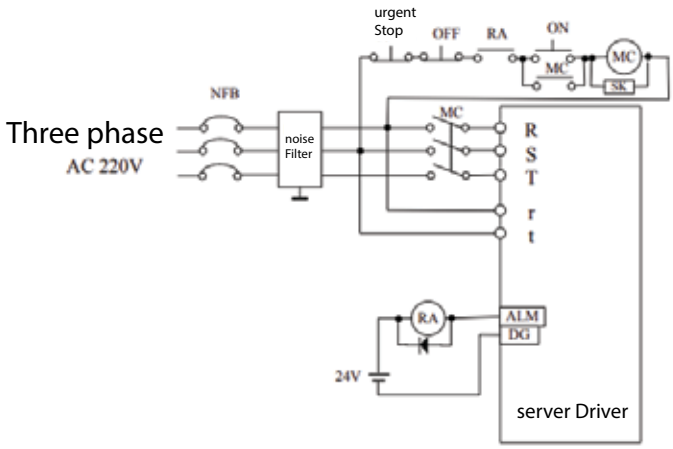

Figure 7.1 Power Wiring Diagram

Chapter 7 Running

7.1 Grounding

Ground the servo drive and motor reliably. To avoid electric shock, the protective ground terminal of the servo drive is
The protective ground of the control box is always on. Since the servo driver uses PWM technology to power the servo motor through the power tube
Power supply, drivers and cables may be affected by switching noise. In order to comply with EMC standards, the grounding wire is exhausted.
Possible coarse, the grounding resistance is as small as possible.

7.2 Working sequence

7.2.1 Power-on sequence

Connect the power supply to the main circuit power input terminal through the electromagnetic contactor.
2. The power supply of the control circuit r, t is connected to the main circuit power supply at the same time or before the main circuit power supply. If only the control is turned on
The power supply of the circuit, the servo ready signal (SRDY) OFF.
3. After the main circuit power is turned on, the delay is about 1.5 seconds, the servo ready signal (SRDY) is ON, and the servo can be accepted at this time.
Service enable (SON) signal, detection of servo enable is valid, base circuit is on, motor is energized, is running
status. The servo enable is detected to be invalid or there is an alarm, the base circuit is turned off, and the motor is in a free state.
4. When the servo enable is turned on with the power supply, the base circuit turns on after approximately 1.5 seconds.
Frequently turning on and off the power supply may damage the soft start circuit and the dynamic braking circuit.
It is made 5 times an hour, 30 times a day or less. If the drive or motor is over-heated, after the cause of the fault is removed,
It will take another 30 minutes to cool down before you can turn it on again.

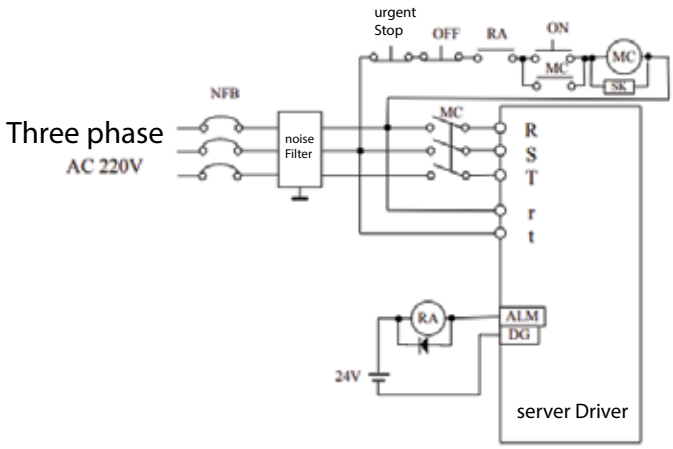

Figure 7.1 Power Wiring Diagram

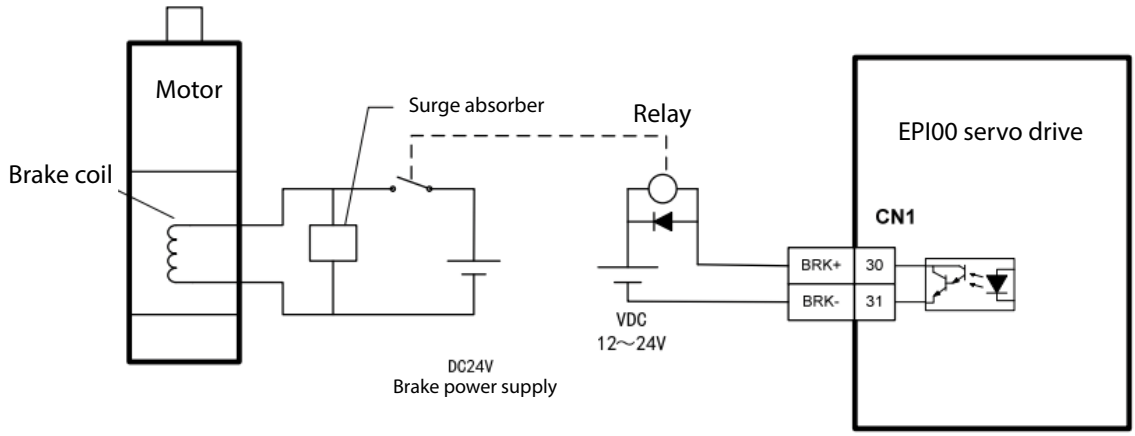

Figure 7.4 Mechanical brake wiring diagram

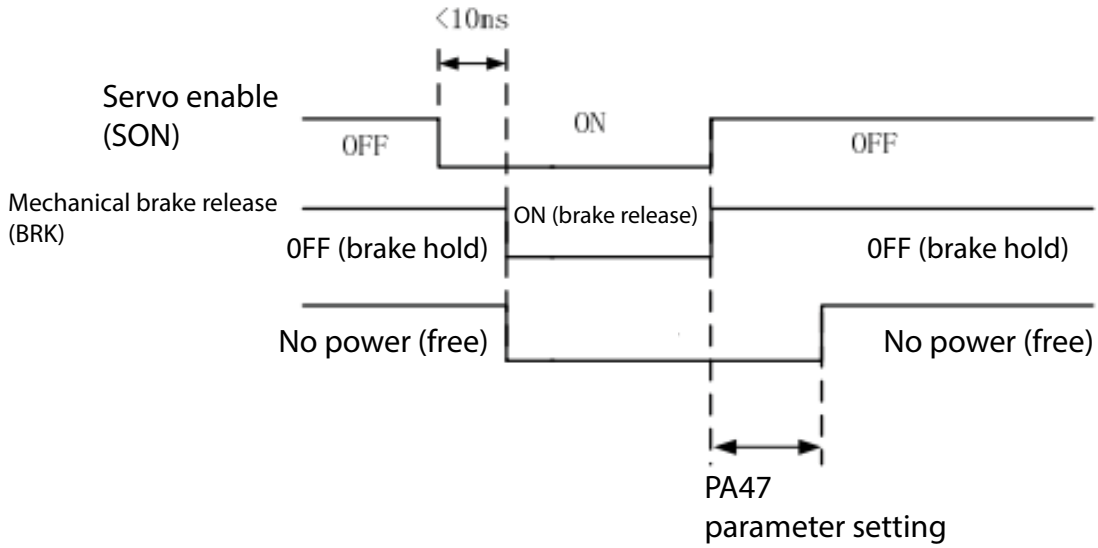

Figure 7.5 Mechanical brake action sequence when the motor is stopped (motor speed <30r/min)

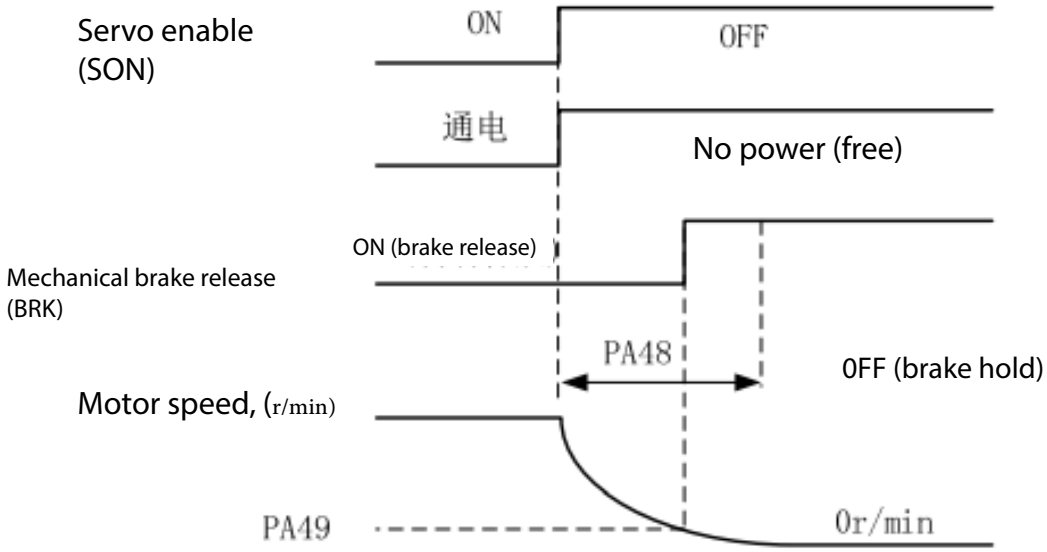

7.6 Mechanical brake action timing when the motor is running

7.4 Precautions

For the case where the start and stop frequencies are high, it is necessary to confirm in advance whether it is within the allowable frequency range. Allowed frequency

The range varies depending on the type of motor, capacity, load inertia, and motor speed. First set the acceleration and deceleration time to prevent

Excessive regenerative energy (in the position control mode, set the acceleration/deceleration time of the output pulse of the host controller or set the drive

Actuator parameter PA19; in speed control mode, set drive parameters PA40 and PA41). The load inertia is m

Under the condition of multiple motor inertia, the starting and stopping frequencies allowed by the servo motor are as follows:

Load inertia multiple	Allowed start and stop frequency
m≤3	>100 times / minute; acceleration and deceleration time 60ms or less
m≤5	60~100 times/min; acceleration and deceleration time 150ms or less
m>5	<60 times / minute; acceleration and deceleration time 150ms or more

If the requirements are not met, you can reduce the internal torque limit (parameters PA34, PA35) to reduce the motor.

High speed (parameter PA23) method.

The start-stop frequency allowed by the servo motor varies with load conditions, running time, and other factors. General load inertia

The number is less than 5 times. When used under large load inertia, it may happen that the main circuit overvoltage or braking is different during deceleration.

Often, you can use the following methods:

1. Reduce the internal torque limit (parameters PA34, PA35);

2. Reduce the maximum motor speed (parameter PA23);

3. Install an additional regenerative unit.

The servo drive is equipped with the power supply of the encoder. In order to ensure the normal operation of the encoder, the output power must be maintained.

Press 5V ± 5%. When the user uses a long cable, it may cause voltage loss. In this case, please make

The encoder is powered by a multi-core cable to reduce the voltage drop across the cable.

7.5 Test run

7.5.1 Inspection before operation

After installation and wiring, check the following items before starting up:

- l Is the connection correct? Especially R, S, T and U, V, W, is there any looseness?
- l Is the input voltage correct?
- l Is the motor connection cable shorted or grounded?
- l Is the encoder cable connected correctly?

7.5.2 Power-on test run

1.Before powering up

- l The motor is unloaded and no load is applied to the motor shaft.
- l The motor must be fixed due to the impact of motor acceleration and deceleration.

2. Wiring

- l According to Figure 7.7 wiring, main circuit terminals, three-phase AC 220V connected to R, S, T terminals.
- l Control voltage terminals r, t are connected to single-phase AC 220V.
- l Encoder signal connector CN2 is connected to the servo motor.
- l Control signal connector CN1 Connect as shown.

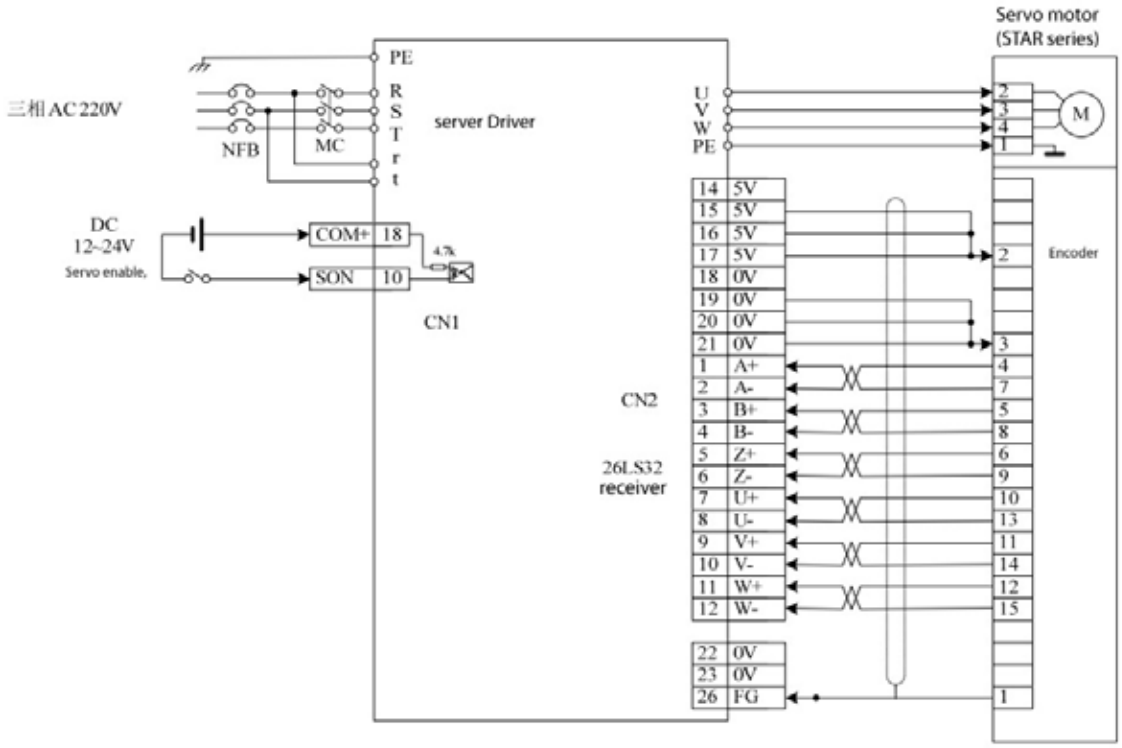

Figure 7.7 Test run wiring diagram

3. JOG operation

- l Turn on the control circuit power supply (the main circuit power supply is temporarily not connected), the display of the drive is lit, if an alarm occurs,

  Please check the connection.
- l Turn on the main circuit power and the POWER indicator lights up.
- l Set the parameter values

- according to the following table:

Parameter number	significance	Parameter value	Factory default
PA4	Control method selec-tion	3	0
PA20	Drive inhibit input is invalid	1	0

- After confirming that there is no alarm and any abnormal conditions, make the servo enable (SON) ON and the RUN indicator light.

  The motor is energized and is at zero speed.

- Select "Jr - " in the first layer by pressing the button, and press the Enter key to enter the JOG operation mode.

  When the JOG is running, the prompt is "J 0", the value unit is r/min, and the system is at speed.

  Control mode, speed command is provided by the button. Press ↑ and hold, the motor runs at JOG speed, release button

  Key, the motor stops, keeps zero speed; press ↓ key and hold, the motor runs in reverse direction at JOG speed, release the button,

  The motor stops and keeps at zero speed. The JOG speed is set by parameter PA21 and the default is 120r/min.

  Figure 7.8 JOG operation block diagram

- l If the external control servo enable (SON) is inconvenient, you can set the parameter PA53 to 0001 to force the servo enable.

  (SON) ON is active and does not require external wiring to control SON.

4. Manual speed control operation

- l Turn on the control circuit power supply (the main circuit power supply is temporarily not connected), the display of the drive is lit, if an alarm occurs,

  Please check the connection.

- l Turn on the main circuit power and the POWER indicator lights up.

- l Set the parameter values

7.6 Simple wiring operation in position control mode

1. wiring

- l Connect according to Figure 7.10, main circuit terminals, three-phase AC 220V connected to R, S, T terminals.
- l Control voltage terminals r, t are connected to single-phase AC 220V.
- l Encoder signal connector CN2 is connected to the servo motor.
- l Control signal connector CN1 Connect as shown.

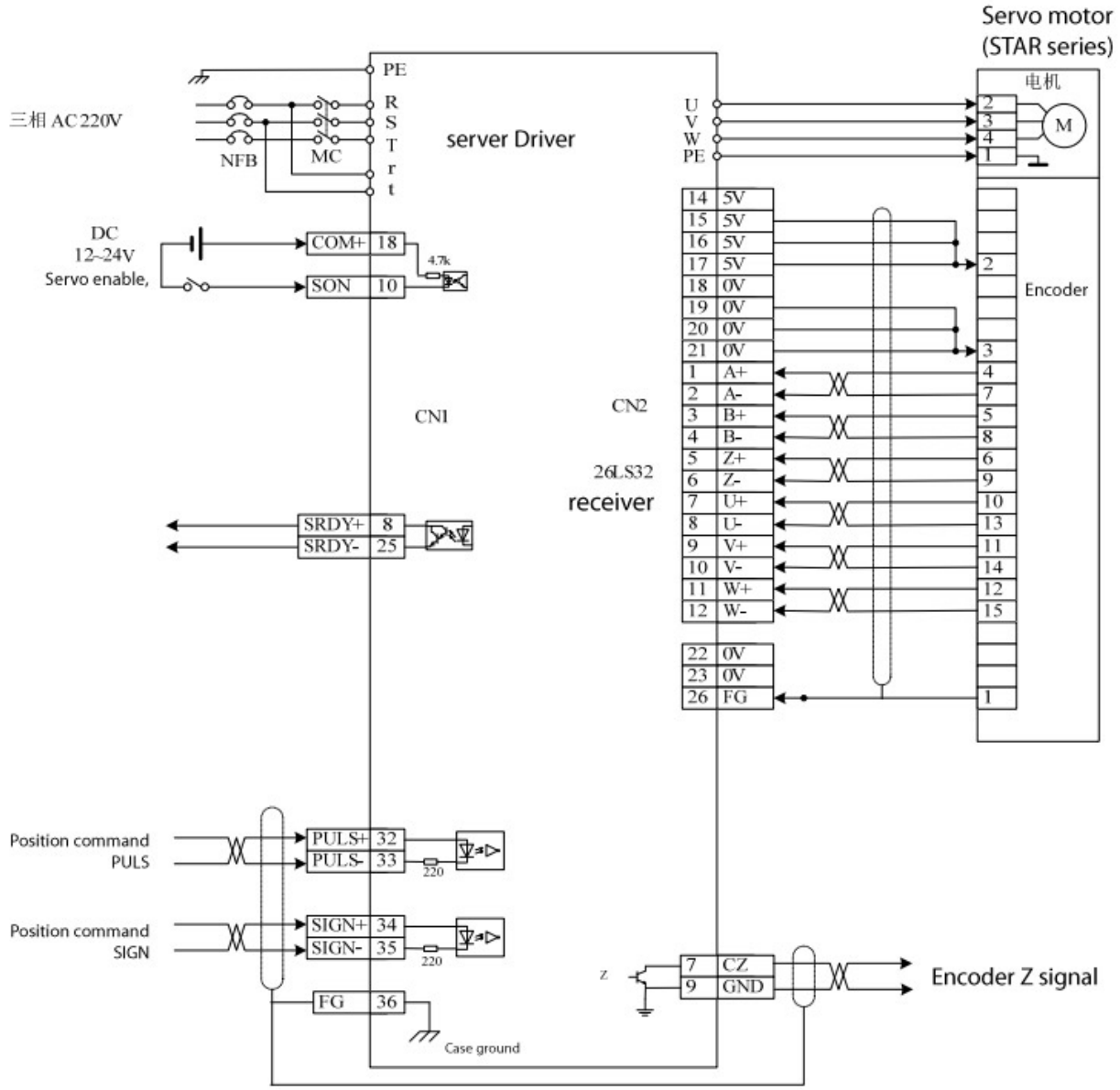

2. operating

- l Turn on the control circuit power and main power. The display has a display and the POWER indicator lights up.
- l Set the parameter values

- according to the following table:

Parameter number	significance	Parameter value	Factory default
PA4	Control method selection	3	0
PA12	Electronic gear molecule	user settings	1
PA13	Electronic gear denominator	user settings	1
PA19	Position command smoothing filter	0	0
PA20	Drive inhibit input is invalid	1	0

- After the alarm and any abnormal conditions, the servo enable (SON) is turned on, the RUN indicator is lit; the slave controller

  Send the low frequency pulse signal to the drive to make the motor run at low speed.

3. Electronic gear setting

The encoder mounted encoder is 10000 pulses per revolution by setting the electronic gear parameters PA12, PA13

Any pulse equivalent can be obtained. Note: You can set any value for the numerator and denominator to get any ratio.

But it is best not to exceed the 1/50~50 range.

Table 7-1 Relationship between the number of input pulses and the number of revolutions

Input pulse number	Number of motor revolutions	Electronic gear molecule PA12	Electronic gear Sub PA13
Pules	$\frac{pules \times PA12}{10000 \times PA13}$	**PA12**	**PA13**
10000	**1**	**1**	**1**
5000	**1**	**2**	**1**
3000	**1**	**10**	**3**
800	**1**	**25**	**2**
20000	**1**	**1**	**2**
1000	**2/3**	**20**	**3**
4000	**3**	**30**	**4**

Table 7-2 Relationship between input pulse frequency and rotation speed

Input pulse frequency (Hz)	Motor speed (r/min)	Electronic gear molecule PA12	Electronic gear Sub PA13
Frequency		**PA12**	**PA13**
300K	**1800**	**1**	**1**
500K	**3000**	**1**	**1**
100K	**1200**	**2**	**1**
100K	**1800**	**3**	**1**
50K	**1000**	**10**	**3**
200K	**800**	**2**	**3**
100K	**300**	**1**	**2**

7.7 Simple wiring operation in speed control mode

Wiring

- l Connect according to Figure 7.11. The main circuit terminals and three-phase AC 220V are connected to the R, S and T terminals.
- l The control voltage terminals r and t are connected to single-phase AC 220V.
- l The encoder signal connector CN2 is connected to the servo motor.
- l Control signal connector CN1 is connected as shown.
- l If only speed control is used, it is not necessary to connect the encoder output signal; if the external controller is a position controller,

  Need to connect the encoder output signal. Figure 7.11 Simple wiring diagram of speed control mode

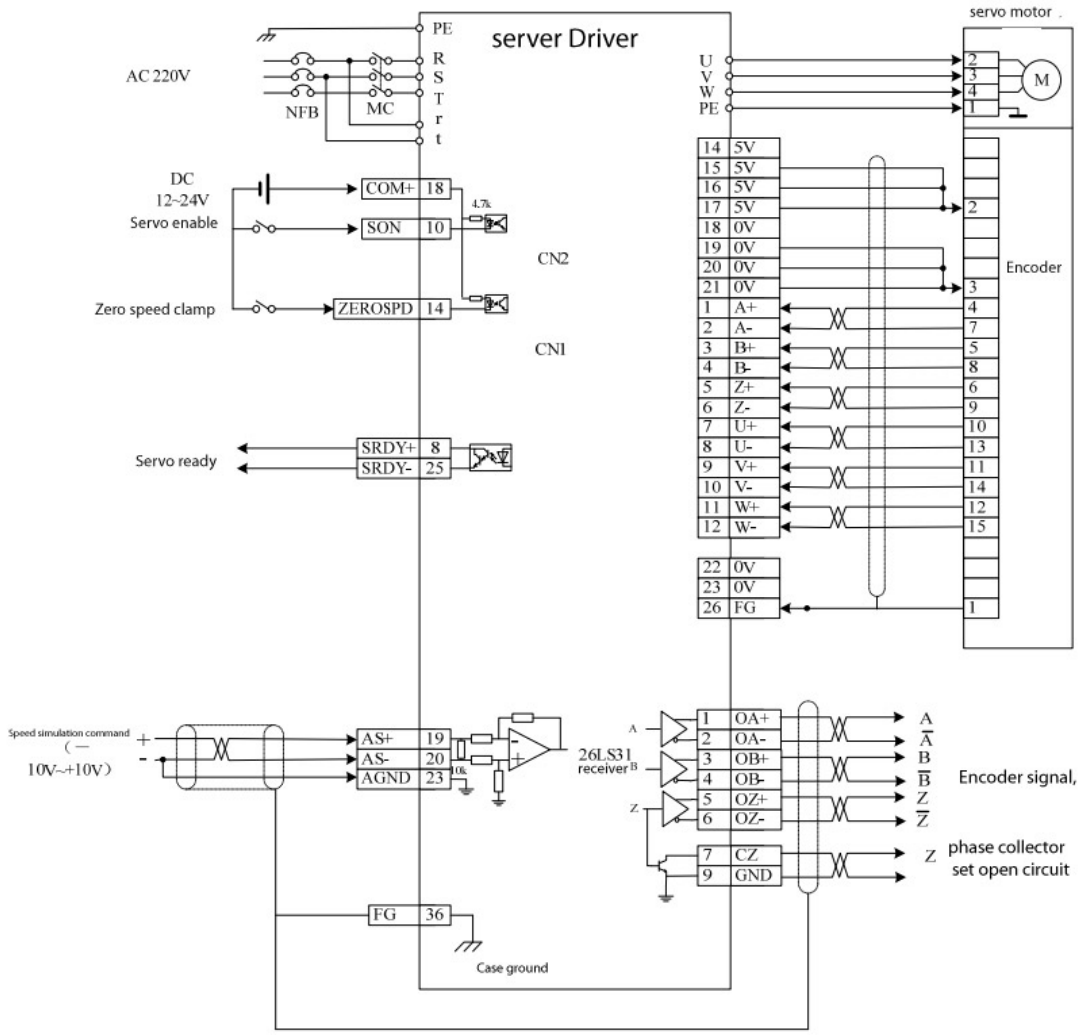

2. Operation

- **l Turn on the control circuit power and main power. The display has a display and the POWER indicator lights up.**
- **l Set the parameter values**

- **according to the following table:**

Parameter number	significance	Parameter value	Factory default
PA4	Control method selection	1	0
PA20	Drive inhibit input is invalid	1	0
PA22	Internal and external speed command selection	1	1
PA40	Acceleration time constant	0	0
PA41	Deceleration time constant	0	0
PA43	Analog speed command gain	Set as needed	300
PA44	Analog speed command direction is reversed	0	0
PA45	Analog speed command zero offset compensation	0	0

After there is no alarm or any abnormal condition, the servo enable **(SON)** turns **ON** and the **RUN** indicator lights.

- l Add an adjustable DC voltage to the analog speed input port, gradually increase this voltage from 0 to ensure motor rotation

  The speed changes accordingly with the command; when a negative voltage is applied, the motor should be reversed.

- l Close the zero speed clamp switch **ZEROSPD**, the motor should stop at zero speed.
- l If the given analog command voltage is zero-speed voltage (**0V**), there is a zero offset between the upper controller and the driver.

  Voltage, the motor may run at low speed, the parameter **PA45** can be adjusted to compensate for the zero offset and make the motor zero speed.

- l Adjust parameters **PA43, PA44** to change the input gain and direction.

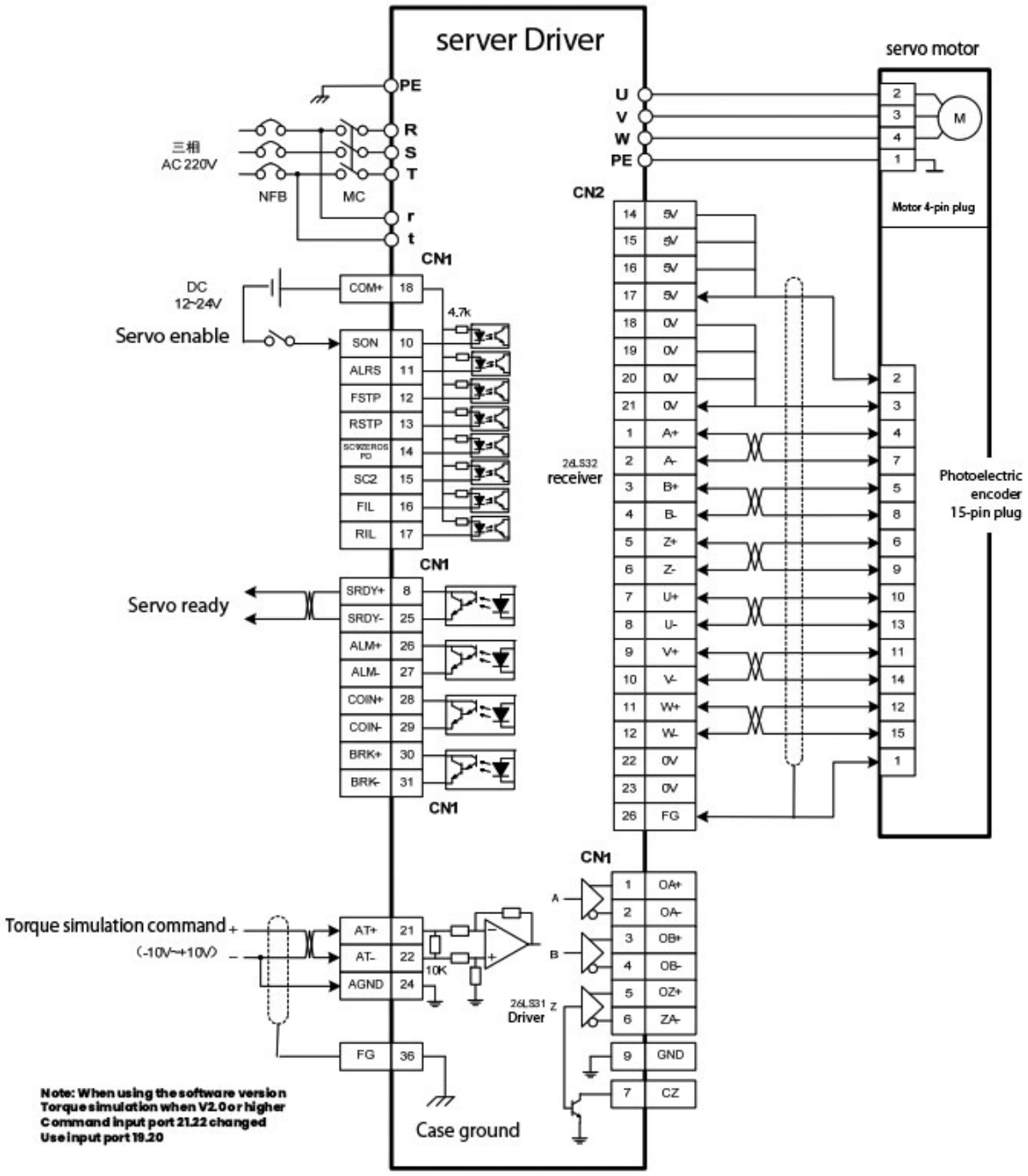
server Driver
servo motor
PE
R
S
T
r
t
三相
AC 220V
NFB
MC
U
V
W
PE
M
Motor 4-pin plug
CN2
CN1
DC
12~24V
Servo enable
COM+ 18
SON 10
ALRS 11
FSTP 12
RSTP 13
SC2 15
FIL 16
RIL 17
4.7k
Servo ready
SRDY+ 8
SRDY- 25
ALM+ 26
ALM- 27
COIN+ 28
COIN- 29
BRK+ 30
BRK- 31
26LS32
receiver
Photoelectric
encoder
15-pin plug
Torque simulation command
(-10V~+10V)
AT+ 21
AT- 22
AGND 24
10K
FG 36
26LS31
Driver
OA+
OA-
OB+
OB-
OZ+
ZA-
GND
CZ
Case ground
Note: When using the software version
Torque simulation when V2.0 or higher
Command input port 21.22 changed
Use input port 19.20

7.8 Simple wiring operation of torque control mode

1. Wiring

- l Connect according to Figure 7.12, main circuit terminal, three-phase AC 220V connected to R, S, T terminals.
- l Control voltage terminals r, t are connected to single-phase AC 220V.
- l Encoder signal connector CN2 is connected to the servo motor.
- l Control signal connector CN1 Connect as shown.

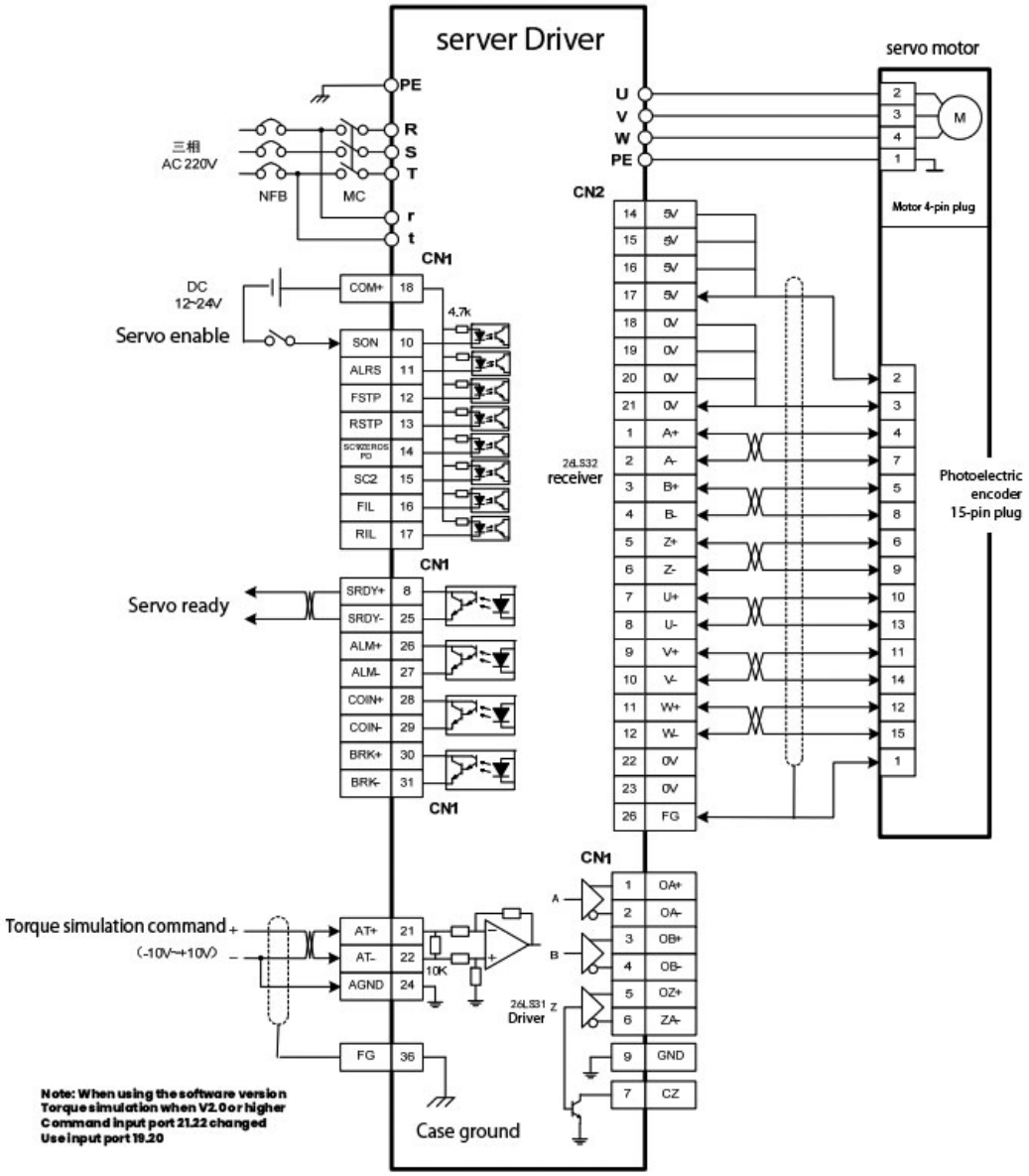

7.12 Simple wiring diagram of torque control mode

2. Operation

- l Turn on the control circuit power and main power, the display has a display, and the POWER indicator lights up;
- l Set the parameter values

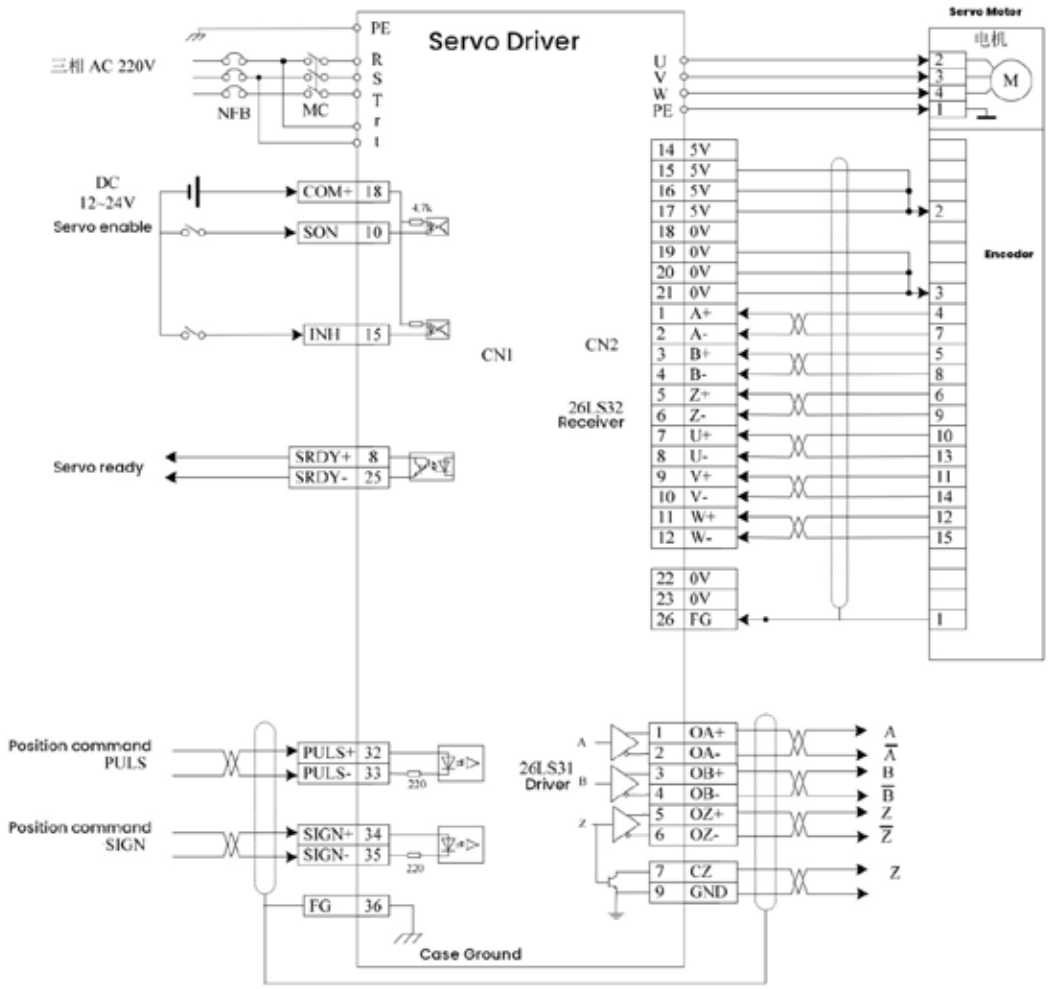

7.9.2 Operation

- l Set the parameter values

- according to the following table:

Parameter number	significance	Parameter value	Factory default value
PA4	Control method selection	0	0
PA20	Drive inhibit input is invalid	1	0
PA12	First electronic gear molecule	user settings	1
PA13	Electronic gear denominator	user settings	1
PA19	Position command smoothing filter	0	0
PA51	Dynamic electronic gears are effective	1	0
PA52	Second electronic gear molecule	user settings	1

l Electronic gear switching by controlling the input terminal INH. When the INH terminal is OFF, input electronic teeth

The wheel is PA12/PA13; when the INH terminal is ON, the input electronic gear is PA52/PA13;

l Note: When switching electronic gears, the timing of Figure 7.14 must be met, before and after the change point of input INH

Less 10ms, don't pulse.

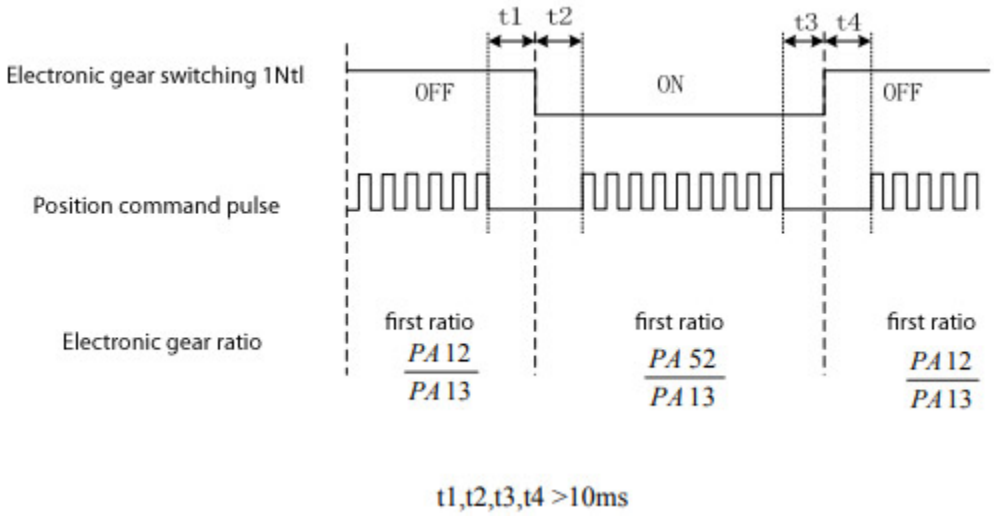

Figure 7.14 Dynamic Electronic Gear Switching Timing

7.10 Input terminal switching control mode

The input terminal switching control mode function means that the two control modes are implemented by ON/OFF of one input terminal.

When switching, you can switch between "position/speed" or "speed/torque" or "torque/position".

Increase parameter PA32 (control mode switching allowed), when PA32=0, control mode is not allowed by external input

Sub-switching, the control mode is determined by parameter PA4, and the function of the "alarm clear" terminal is to clear the alarm. When PA32=1

When the control mode is allowed to be switched by the external input terminal, the "Alarm Clear" terminal can be used

according to the parameter value of PA4.

Switching between “position/speed”, “speed/torque”, “torque/position”, at this time, the input

The clear alarm function of the incoming terminal is disabled.

The position command of the “position” control mode comes from the externally input pulse train; the speed command of the “speed” control mode has

Two sources, when PA22=0, the speed command comes from the internal speed, and when the parameter PA22=1 (default), the speed command

From the external speed analog input; the torque command of the “torque” control mode comes from the external torque analog input.

Parameter PA32	Parameter PA4	“Alarm Clear” ALRS input terminal	control method
0 (default)	0 (default)	Used to clear the alarm	position
	1	Used to clear the alarm	speed
	6	Used to clear the alarm	Torque
1	0	OFF	position
		ON	speed
	1	OFF	speed
		ON	Torque
	6	OFF	Torque
		ON	position

7.11 User torque overload alarm function

In order to prevent the accidental event from happening in some cases, the motor load is abnormally increased, which may damage some machines.

The device is designed with a user torque overload alarm function. When the function is valid, the drive system detects the motor torque when

It is found that the torque is higher than the given parameter value, and after a period of time, the drive alarms, the alarm number is Err-29, and the motor stops.

turn.

When the user torque overload alarm function is required, set PA31>9, and set PA30 and PA31 reasonably so that they are

In the application, an alarm can be generated as soon as an unexpected event occurs, and no false alarm occurs under normal working conditions.

User torque overload alarm function (Err-29) and overload alarm (Err-13) are different, user torque overload alarm

The function can set the alarm parameters by the user, and the overload alarm is set by the manufacturer. The user cannot modify the parameters, regardless of the

Whether the household torque overload alarm function is valid or not, the overload alarm is always valid. Under normal circumstances, user torque overload report

The alarm function is set to disabled (PA31=0).

Chapter 8 Specifications

8.1 Servo drive model

- 2A

记号	输出功率kW
2A	1.0
3A	1.4
5A	2.5

8.2 Servo drive size

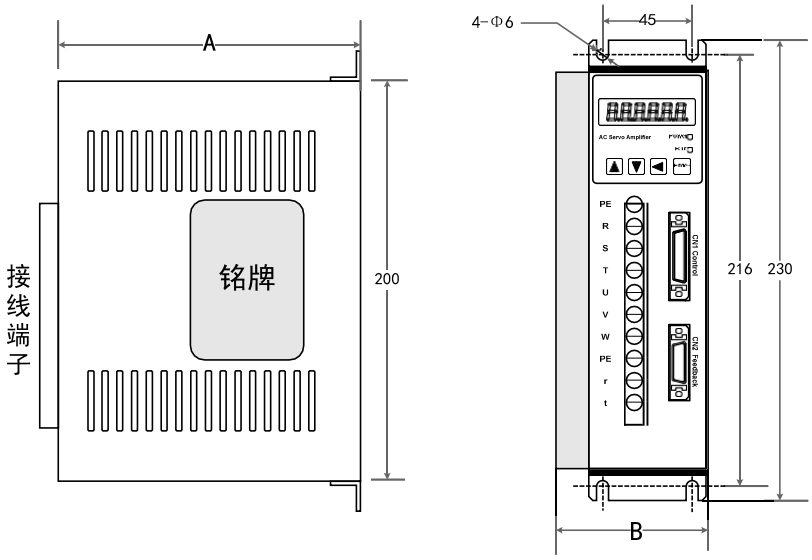

Size (mm)	A	B
2A/3A	152	77
5A	200	108

Figure 1-1 Driver Dimensions

8.3 Servo drive specifications

model		2A	3A	5A
Input power		Three-phase AC220V -15%~+10% 50/60Hz		
Use environment	temperature	Work: 0~40°C Storage: -40°C~50°C		
	humidity	40%~80% (no condensation)		
	atmospheric pressure	86~106kPa		
Control Method		Position control, speed control, torque control		
Regenerative braking		Built in		
characteristic	Speed frequency response	≥250Hz		
	Speed volatility	<±0.03 (load 0~100%); <±0.02 (power supply -15%~+10%) (value corresponds to rated speed)		
	Speed ratio	1:5000		
	Pulse frequency	≤500kHz		
Control input		1 Servo enable 2 alarm clear 3ccw drive disable 4cw drive disabled 5 deviation counter clear / speed selection 1 / zero speed clamp 6 command pulse prohibition / speed selection 2 7ccw torque limit 8cw torque limit		
Control output		1 servo ready output 2 servo alarm output 3 positioning completion output / speed arrival output 4 mechanical brake output		
Position control	Input	1 pulse + symbol 2ccw pulse / cw pulse 3 two-phase a / b orthogonal pulse		
	Electronic gear	1~32767/1~32767		
	Feedback pulse	2500 lines / turn		
speed control		4 internal speeds		
Acceleration and deceleration		Parameter setting 1~10000ms / 1000r/min		
Monitoring function		Speed, current position, command pulse accumulation, position deviation, motor torque, motor current, straight line Speed, absolute position of the rotor, command pulse frequency, operating status, input and output terminal signals, etc.		
Protective function		Overspeed, mains overvoltage and undervoltage, overcurrent, overload, brake abnormality, encoder abnormality, control power supply Abnormal, positional tolerance, etc.		
Applied load inertia		Less than 5 times the motor inertia		

8.4 Model code parameter and motor comparison table

The setting value of parameter pa-01 (model code) must match the drive and motor used. The setting value of parameter pa-01 is shown in the following table. The corresponding drive model code is set according to the motor of different manufacturers. If it does not match, the performance will be degraded. Or an alarm occurs.Each model code has a different default parameter combination.The drive device has already set the corresponding parameter pa-01 at the factory and restored to the corresponding default parameter combination.If you need to modify the model code or need to restore the factory default parameter combination, please refer to Section 7.13.1 Implementation.At present, the motors that can be adapted to the manufacturers are motor manufacturers such as Huada and MiG.

8.4.1 Huada, MiG AC servo motor adaptation

Table 8.2 Huada, MiG AC servo motor adapter table

motor model	Torque N·m	Rotating speed rpm	power kW	Huada series motor			MiG series motor		
				2A	3A	5A	2A	3A	5A
60ST-M00630(C)	0.6	3000	0.2				346		
60ST-M01330(C)	1.3	3000	0.4				347		
60ST-M01930	1.9	3000	0.6				55	75	
80ST-M01330	1.3	3000	0.4	25			56	76	
80ST-M02430	2.4	3000	0.8	26	28		57	77	
80ST-M03330	3.3	3000	1.0	27	29				
80ST-M03520	3.5	2000	0.73				58	78	
80ST-M04025	4.0	2500	1.0				59	79	
90ST-M02430	2.4	3000	0.75				60	80	
90ST-M03520	3.5	2000	0.7				61	81	
90ST-M04025	4.0	2500	1.0				62	82	

motor model	Torque N·m	Rotating speed rpm	power kW	Huada series motor			MiG series motor		
				2A	3A	5A	2A	3A	5A
110ST-M02030	2.0	3000	0.6	30	34		63	83	
110ST-M04020	4.0	2000	0.8				64	84	
110ST-M04030	4.0	3000	1.2	31	35		65	85	
110ST-M05030	5.0	3000	1.5	32	36		66	86	
110ST-M06020	6.0	2000	1.2	33	37		67	87	
110ST-M06030	6.0	3000	1.8		38			88	
130ST-M04025	4.0	2500	1.0	39	44		68	89	
130ST-M05025	5.0	2500	1.3	40	45		69	90	
130ST-M06025	6.0	2500	1.5	41	46		70	91	100
130ST-M07720	7.7	2000	1.5	42	47	0			
130ST-M07725	7.7	2500	2.0					92	101
130ST-M07730	7.7	3000	2.3		48	1			
130ST-M10010	10.0	1000	1.0				71	93	
130ST-M10015	10.0	1500	1.5	43	49	2	72	94	102
130ST-M10025	10.0	2500	2.5		50	3		95	103
130ST-M12020	12.0	2000	2.4		52	11			
130ST-M15015	15.0	1500	2.3		51	4		96	104
130ST-M15025	15.0	2500	3.8			5			105
150ST-M12030	12.0	3000	3.6			6			
150ST-M15025	15.0	2500	3.8			7			
150ST-M18020	18.0	2000	3.6			8			
150ST-M23020	23.0	2000	4.7			9			
150ST-M27020	27.0	2000	5.4			10			
180ST-M17215	17.2	1500	2.7						106
180ST-M19015	19.0	1500	3.0						107
180ST-M21520	21.5	2000	4.5						108
180ST-M27010	27.0	1000	2.9						109
180ST-M27015	27.0	1500	4.3						110
180ST-M35015	35.0	1500	5.5						112

8.5 Servo motor model

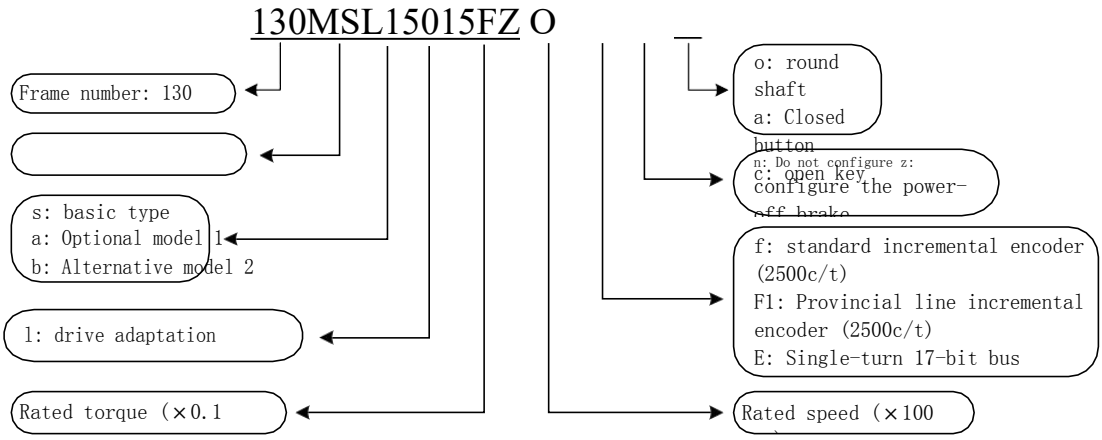

8.6 Servo motor wiring

For the 60, 80, 90 series wiring methods, see the respective specifications. The 110, 130, 150, and 180 series motor wirings are as follows:

8.6.1 Winding wiring

Terminal symbol	Terminal number	Terminal description
U	2	Motor u phase power input
V	3	Motor v phase power input
W	4	Motor w phase power input
⏚	1	Motor housing ground terminal

8.6.2 Brake

Terminal symbol	Terminal number	Terminal description
DC+	1	Brake power supply is DC power supply Non-polar access requirements
DC-	2	
⏚	3	Motor housing ground

8.6.3 Incremental standard encoder

Terminal symbol	Terminal number	Terminal description
5V	2	Encoder 5v power input
0V	3	
A+	4	Encoder a phase output
A-	7	
B+	5	Encoder b phase output
B-	8	
Z+	6	Encoder z-phase output
Z-	9	
U+	10	Encoder u phase output
U-	13	
V+	11	Encoder v phase output
V-	14	
W+	12	Encoder w phase output
W-	15	
PE	1	Encoder housing

8.6.4 Incremental line encoder

Terminal symbol	Terminal number	Terminal description
5V	2	Encoder 5v power input
0V	3	
A+	4	Encoder a phase output
A-	7	
B+	5	Encoder b phase output
B-	8	
Z+	6	Encoder z-phase output
Z-	9	
PE	1	Encoder housing

8.7 Servo motor parameters

8.7.1 60 series motor parameters

motor model	60 series		
	00630(C)	**01330(C)**	**01930**
Rated power (kW)	0.2	0.4	0.6
Rated line voltage (v)	220	220	220
Rated line current (a)	1.2	2.8	3.5
Rated speed (rpm)	3000	3000	3000
Rated torque (N·m)	0.637	1.27	1.91
Peak torque (N·m)	1.911	3.8	5.73
Rotor inertia (kg·m^2)	0.17×10^{-4}	0.302×10^{-4}	0.438×10^{-4}
Encoder line number (ppr)	2500		
Motor insulation grade	ClassB(130℃)		
Protection level	IP64		
Use environment	Ambient temperature: -20 ° C ~ +50 ° C Ambient humidity: relative humidity <90% (without frosting conditions)		

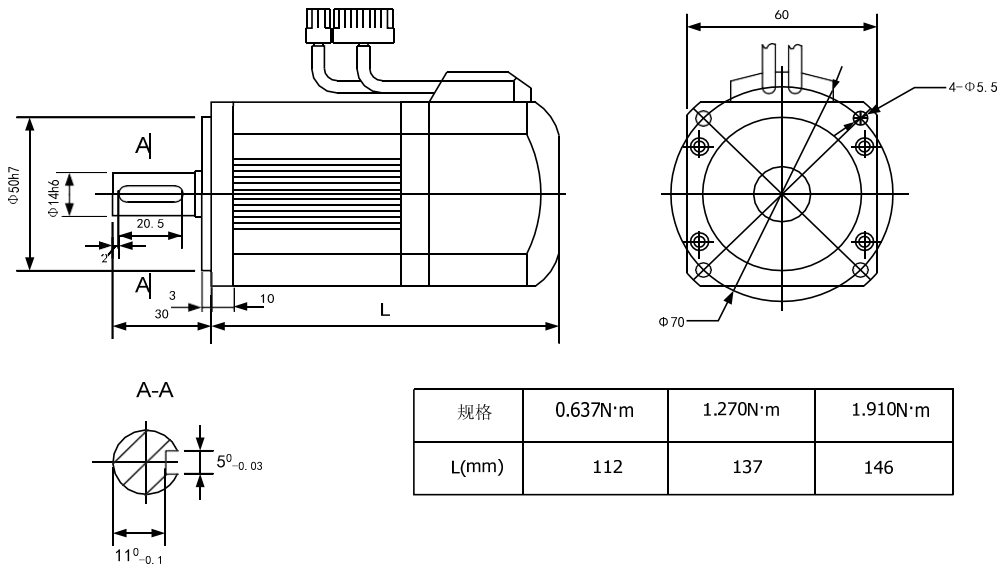

规格	0.637N·m	1.270N·m	1.910N·m
L(mm)	112	137	146

Encoder line sequence:

Socket number	1	2	3	4	5	6	7	8	9	10	11	12	13	14	15
Lead	PE	5V	0V	B+	Z-	U+	Z+	U-	A	V	W	V-	A-	B-	W

8.7.2 80 series motor

motor model	80 series			
	01330	**02430**	**03520**	**04025**
Rated power (kW)	0.4	0.75	0.73	1.0
Rated line voltage (v)	220	220	220	220
Rated line current (a)	2.0	3.0	3.0	4.4
Rated speed (rpm)	3000	3000	2000	2500
Rated torque (N·m)	1.27	2.39	3.5	4.0
Peak torque (N·m)	3.8	7.1	10.5	12
Rotor inertia (kg·m^2)	1.05×10^{-4}	1.82×10^{-4}	2.63×10^{-4}	2.97×10^{-4}
Encoder line number (ppr)	2500			
Motor insulation grade	ClassB(130℃)			
Protection level	IP65			
Use environment	Ambient temperature: -20 ° C ~ +50 ° C Ambient humidity: relative humidity <90% (without frosting conditions)			

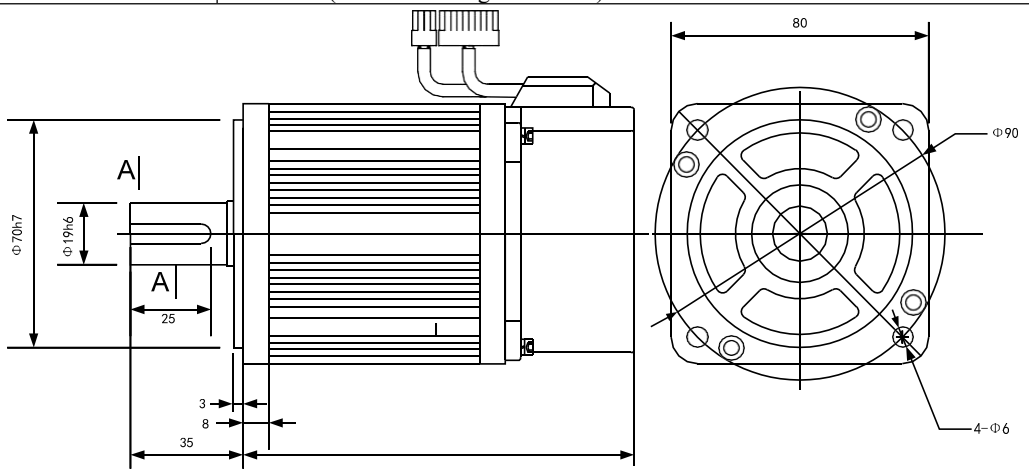

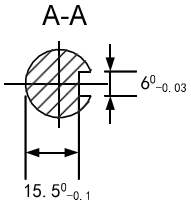

规格	1.27N·m	2.39N·m	3.50N·m	4.00N·m
L(mm)	123	150	178	190

Socket number	1	2	3	4	5	6	7	8	9	10	11	12	13	14	15
Lead definition	PE	5V	0V	B+	Z-	U+	Z+	U-	A+	V+	W+	V-	A-	B-	W-

8.7.3 90 series motor

motor model	90 series		
	02430	**03520**	**04025**
Rated power (kW)	0.75	0.73	1.0
Rated line voltage (v)	220	220	220
Rated line current (a)	3.0	3.0	4.0
Rated speed (rpm)	3000	2000	2500
Rated torque (N·m)	2.4	3.5	4.0
Peak torque (N·m)	7.1	10.5	12.0
Rotor inertia (kg·m^2)	2.45×10^{-4}	3.4×10^{-4}	3.7×10^{-4}
Encoder line number (ppr)	2500		
Motor insulation grade	ClassB(130℃)		
Protection level	IP65		
Use environment	Ambient temperature: -20 ° C ~ +50 ° C Ambient humidity: relative humidity <90% (without frosting conditions)		

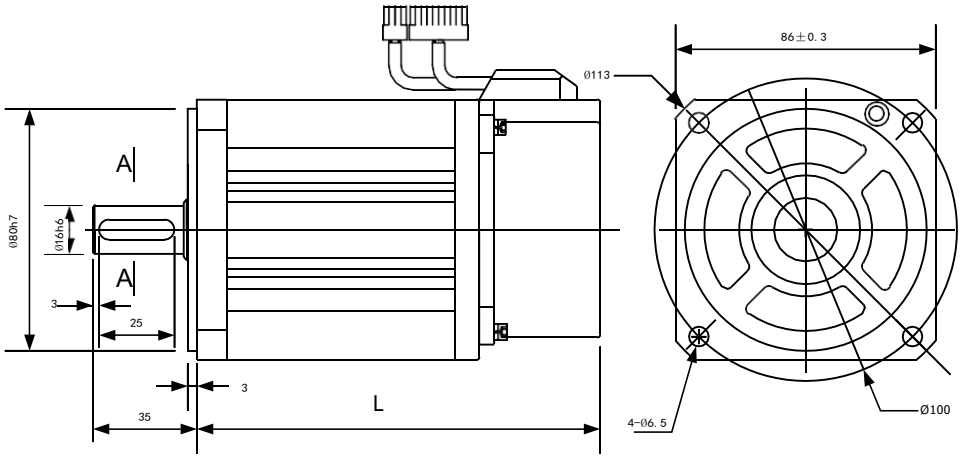

A-A

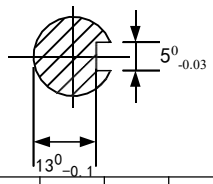

specification	2.4N·m	3.5N·m	4.0N·m

Socket number	1	2	3	4	5	6	7	8	9	10	11	12	13	14	15
Lead	PE	5V	0V	B+	Z-	U+	Z+	U-	A+	V+	W+	V-	A-	B-	W

8.7.4 110 Series Motor

motor model	110 series motor specifications						
	02030	**04020**	**04030**	**05020**	**05030**	**06020**	**06030**
Rated power (kW)	0.6	0.8	1.2	1.0	1.5	1.2	1.8
Rated line voltage (v)	220	220	220	220	220	220	220
Rated line current (a)	2.5	3.5	5.0	5.0	6.0	4.5	6.0
Rated speed (rpm)	3000	2000	3000	2000	3000	2000	3000
Rated torque (N·m)	2.0	4.0	4.0	5.0	5.0	6.0	6.0
Peak torque (N·m)	6.0	12	12	15	15	18	18
Rotor inertia (kg·m^2)	0.31×10^{-3}	0.54×10^{-3}	0.54×10^{-3}	0.71×10^{-3}	0.63×10^{-3}	0.76×10^{-3}	0.76×10^{-3}
Encoder line number (ppr)	2500						
Motor insulation grade	ClassB(130℃)						
Protection level	IP65						
Use environment	Ambient temperature: -20 ° C ~ +50 ° C Ambient humidity: relative humidity <90% (without frosting conditions)						

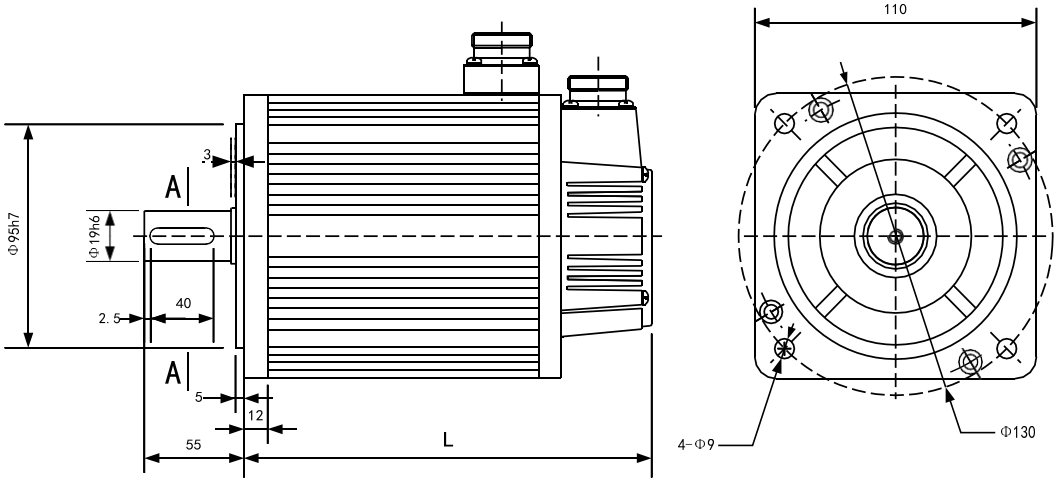

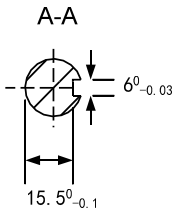

规格	2.0N·m	4.0N·m	5.0N·m	6.0N·m
L(mm)	159	189	204	219

8.7.5 130 Series Motor

motor model	130 series motor specifications									
	04025	**05025**	**06025**	**07720**	**07725**	**10010**	**10015**	**10025**	**15015**	**15025**
Rated power (kW)	1.0	1.3	1.5	1.6	2.0	1.0	1.5	2.6	2.3	3.8
Rated line voltage (v	220	220	220	220	220	220	220	220	220	220
Rated line current (a)	4.0	5.0	6.0	6.0	7.5	4.5	6.0	10	9.5	13.5
Rated speed (rpm)	2500	2500	2500	2000	2500	1000	1500	2500	1500	2500
Rated torque (N·m)	4.0	5.0	6.0	7.7	7.7	10	10	10	15	15
Peak torque (N·m)	12	15	18	22	22	20	25	25	30	30
Rotor inertia ($kg·m^2$)	0.85×10^{-3}	1.06×10^{-3}	1.26×10^{-3}	1.58×10^{-3}	1.53×10^{-3}	1.94×10^{-3}	1.94×10^{-3}	1.94×10^{-3}	2.77×10^{-3}	2.77×10^{-3}
Encoder line number	2500									
Motor insulation grade	ClassB(130℃)									
Protection level	IP65									
Use environment	Ambient temperature: -20 ° C ~ +50 ° C Ambient humidity: relative humidity <90% (without frosting conditions)									

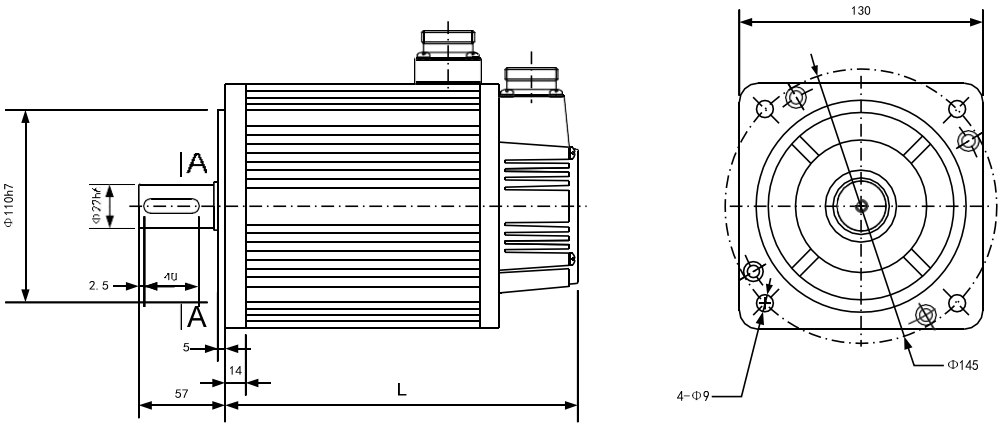

A-A

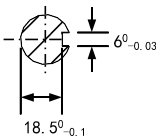

规格	4.0N·m	5.0N·m	6.0N·m	7.7N·m	10.0N·m			15.0N·m	
					1000rpm	1500rpm	2500rpm	1500rpm	2500rpm
L(mm)	166	171	179	192	213	213	209	241	231

8.7.6 150 Series Motor

motor model	150 series motor specifications			
	15025	**18020**	**23020**	**27020**
Rated power (kW)	3.8	3.6	4.7	5.5
Rated line voltage (v)	220	220	220	220
Rated line current (a)	16.5	16.5	20.5	20.5
Rated speed (rpm)	2500	2000	2000	2000
Rated torque (N·m)	15.0	18.0	23.0	27.0
Peak torque (N·m)	45.0	54.0	69.0	81.0
Rotor inertia ($kg·m^2$)	$6.15×10^{-3}$	$6.33×10^{-3}$	$8.94×10^{-3}$	$11.19×10^{-3}$
Encoder line number (ppr)	2500			
Motor insulation grade	ClassB(130℃)			
Protection level	IP65			
Use environment	Ambient temperature: -20 ° C ~ +50 ° C Ambient humidity: relative humidity <90% (without frosting conditions)			

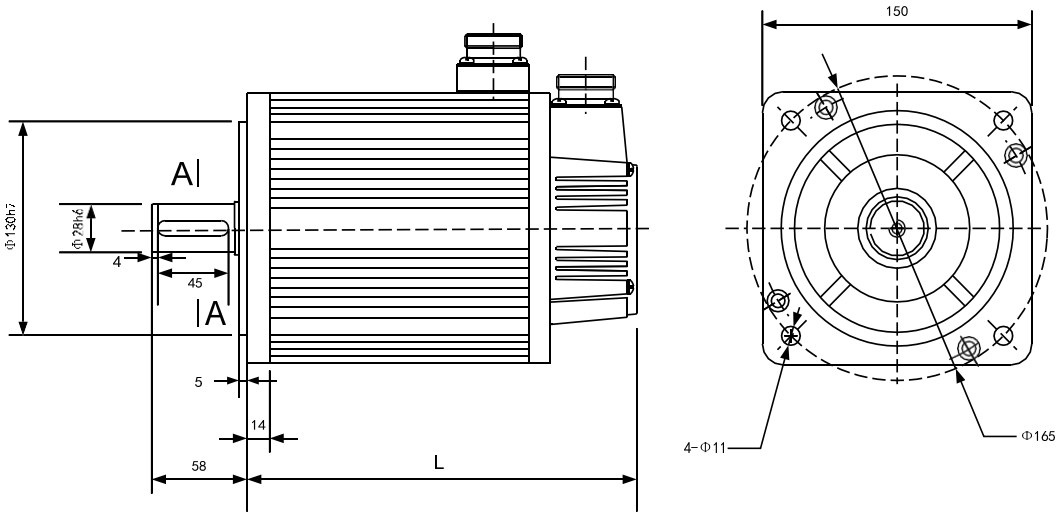

A-A

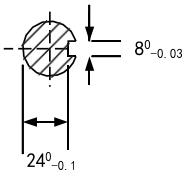

规格	15.0N·m	18.0N·m	23.0N·m	27.0N·m
L(mm)	231	250	280	306

8.7.7 180 series motor

motor model	180 series					
	17215	**19015**	**21520**	**27015**	**35015**	**48015**
Rated power (kW)	2.7	3.0	4.5	4.3	5.5	7.5
Rated line voltage (v)	220	220	220	220	220	220
Rated line current (a)	10.5	12	16	16	19	32
Rated speed (rpm)	1500	1500	2000	1500	1500	1500
Rated torque (N·m)	17.2	19	21.5	27	35	48
Peak torque (N·m)	43	47	53	67	70	96
Rotor inertia (kg·m^2)	3.4×10^{-3}	3.8×10^{-3}	4.7×10^{-3}	6.1×10^{-3}	8.6×10^{-3}	9.5×10^{-3}
Encoder line number (ppr)	2500					
Motor insulation grade	ClassB(130℃)					
Protection level	IP65					
Use environment	Ambient temperature: -20 ° C ~ +50 ° C Ambient humidity: relative humidity <90% (without frosting conditions)					

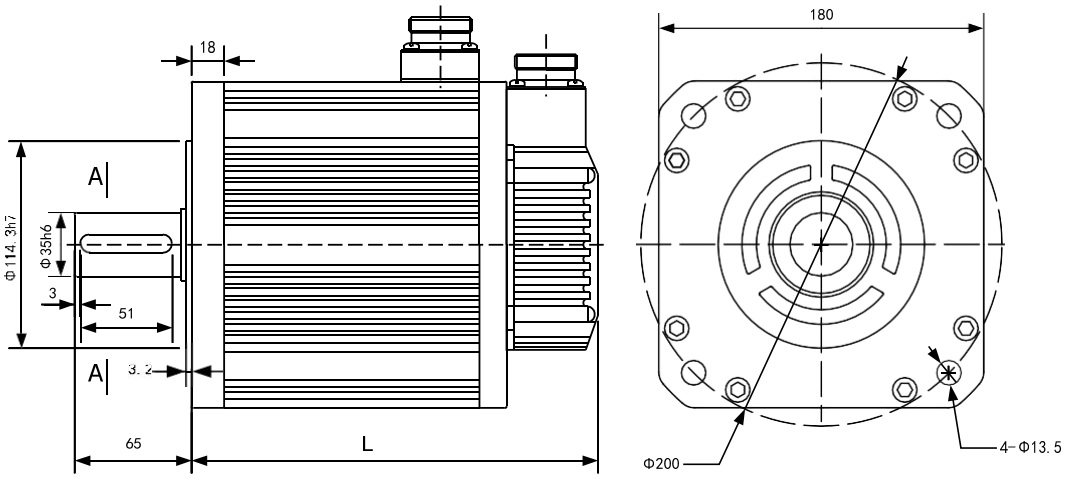

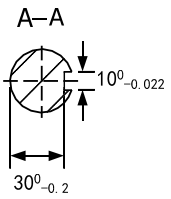

规格	17.2N·m	19.0N·m	21.5N·m	27.0N·m	35.0N·m	48.0N·m
L(mm)	226	232	243	262	292	346