DS3 series servo

User manual

Xinje Electronic Co., Ltd.

No. SC309 20090706 1.0

►► Safety notes

■ Confirmation after get the products

- ✓ If servo drive is missing parts, broken, type wrong, please do not install it.

■ Installation

- ✓ Cut off all the power before installation.

■ Wiring

- ✓ Cut off all the power before wiring.
- ✓ Connect the AC power to the power terminals on the servo drive.
- ✓ Do not connect output terminal U, V, W of servo drive to 3-phase power.
- ✓ Ground the servo drive with $2mm^2$ cables.

■ Running and maintenance

- ✓ Please install the panel guard when power on.
- ✓ Do not touch the terminals within 5 minutes after power off.
- ✓ Do not connect servo drive with loader when test-running.
- ✓ After connect to the loader, please set suitable parameters before running.
- ✓ Do not change the wiring when power on.
- ✓ Do not touch the radiator when running.

►► Product arrival confirmation

1. Confirm the product as the following items.

Item	Remark
The product type is accord with the ordered one	Please confirm the label of servo drive and motor
Servo motor rotation axis is turning well	Can turn by manual. Cannot turn with brake
Is the product broken?	Please check if there is broken because of transportation
Is the screw loose?	Check the screw with screw driver
Motor code	Check the motor code on servo drive and motor, if they are the same

If there is inconsistent item, please contact XINJE sales department.

2. Type

1) Servo drive

DS3 – 2 1P8

- 1P8: Suitable motor capacity
  0P7: 0.75KW, 1P5: 1.5KW, 1P8: 1.8KW, 2P7: 2.7KW
- 2: Voltage level: 2: 220V, 4: 380V
- DS3: Servo series name: DS3: standard type

2) Servo motor

MS -110 ST - M 06030 A Z- 2 1P8

- 1P8: Power
- 2: Voltage level
- Z: Power-loss brake
- A: Shaft
- 06030: Feature code
- M: Feedback part code
- ST: Sine drive motor
- 110: Base No.
- MS: Motor series name

Base No.: 60, 80, 110, 130;

Feedback part code: M (optical pulse encoder)

Feature code: first 3-bit means rated torque; last 2-bit means rated speed

00630: rated torque 0.6N·m, rate speed: 3000rpm

02430: rated torque 2.4N·m, rate speed: 3000rpm

06030: rated torque 6.0N·m, rate speed: 3000rpm

10015: rated torque 10.0N·m, rate speed: 1500rpm

Shaft type: A-no key, B-with key

Power-loss brake: vacant-no, Z-with DC99V power-loss brake

Voltage level: 2—220V, 4-380V

Power: 0P2-0.2KW; 0P4-0.4KW; 0P7-0.75KW; 1P5-1.5KW; 1P8—1.8KW

3. Part name

1) Servo motor

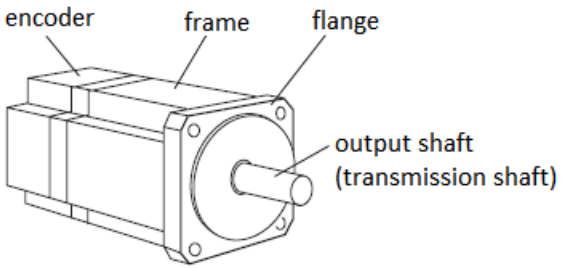

2) Servo drive

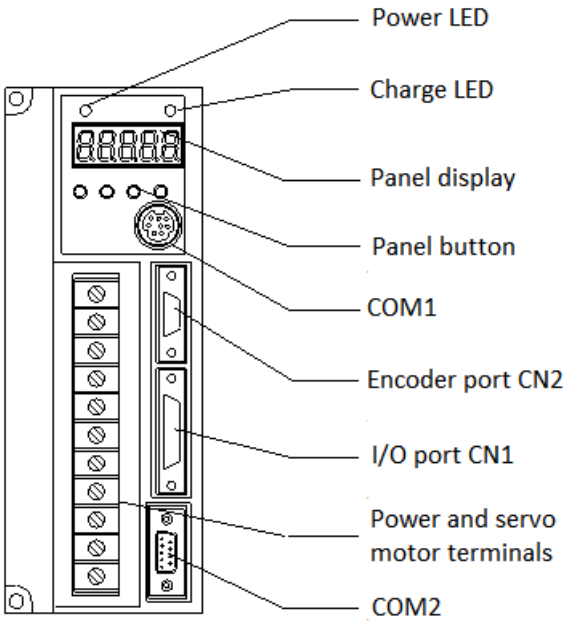

Power LED: turn on when servo drive is power on.

Charge LED: turn on when servo drive is power on. After power off, it will be on until there is no charge in the capacitance of servo drive. At this time, please do not touch the servo drive.

Panel display: to display the servo state, alarm and parameters.

Panel button: to set the parameters.

COM1: connect to PC to debug the servo.

CN2: connect the encoder.

CN1: command input, sequence I/O signal

Power and servo motor terminals: to connect the power supply and power cable of servo motor.

COM2: connect with PLC, HMI, ect.

►► Installation

1. Servo motor

MS series servo motor can be installed vertical or horizontal. If it is installed unsuitable or is in wrong location, the motor life will be shortened.

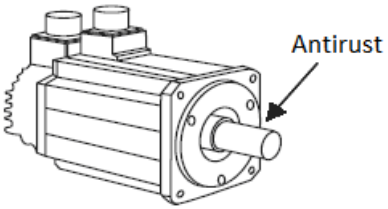

Notes:
Please clear the antirust on the shaft with thinner before install the motor. The thinner cannot touch other parts of motor.

1) Storage temperature

Please store the motor in the range of -20~+60℃

2) Installation location

MS series servo motor should be installed under below location:

- Indoor, no corrosive, flammable, explosive gas
- Good ventilation, less dusts, humidity
- Ambient temperature is in the range of 0~50 ℃
- Relative humidity is in the range of 20%~90% RH, no condensation
- Easy to clean and check

3) Concentricity

Please use coupler when connect to the machine, make the shaft center of motor and machine on the same line. The installation of motor should be accord with the below requirements.

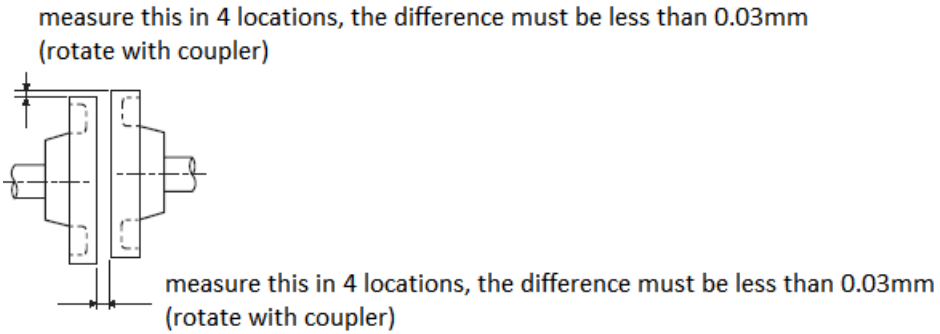

If the concentricity is not enough, it may cause vibration and damage the shaft.

Do not impact the motor shaft when install the coupler. Otherwise the monitor on the other end of loader shaft will be broken.

4) Installation direction

MS series servo motor can be installed vertical or horizontal.

5) The solution to prevent from water or oil drops

Seal the through part of the shaft. Please order the motor with oil sealed.

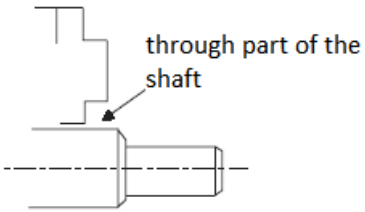

6) The tension of the cables

Do not make large tension for the cable especially for the 0.2mm^2, 0.3mm^2 cables.

2. Servo drive

DS3 series servo drive is base-type. Please install it correctly otherwise there will be error.

1) Storage temperature

Store the servo drive in the range of -20~+85 ℃.

2) Installation location

Install the drive as the following item:

Location	Notes
Install in the control panel	Design the control panel size, servo configuration and cooling mode, to decrease the ambient temperature under 50℃
If close to the heater	to decrease the ambient temperature under 50℃

If close to the vibration	Install the shockproof device on the installation side of servo drive
If close to the corrosive gas	To prevent the corrosive gas from the servo drive, otherwise there will be error for the circuit.
Others	Do not install in the location of high temperature, high humidity, full of dusty and metal powder.

3) Installation direction

The direction must be vertical to the wall. Cool the servo by natural convection or fan.

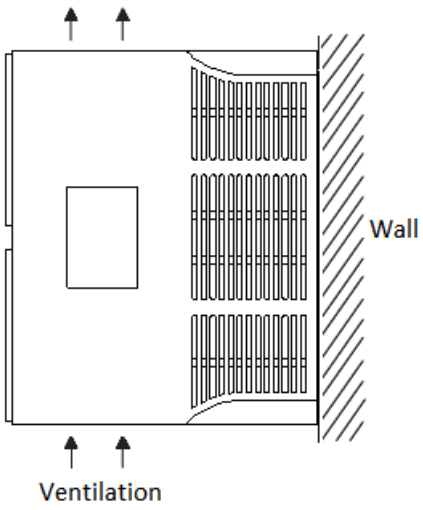

4) Installation standard

Please install the servo drive as the below figure.

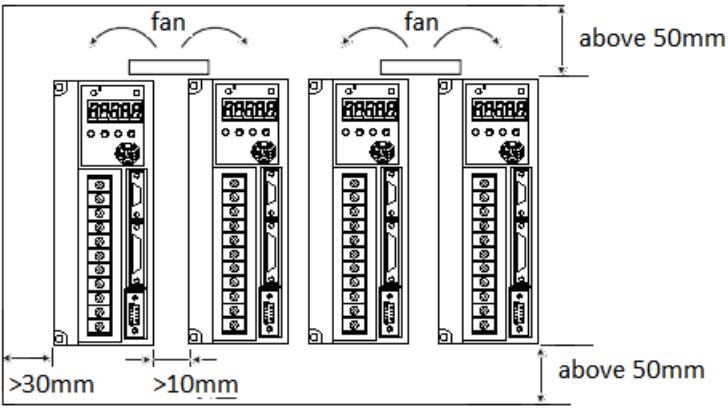

Direction of servo drive

The front side must face to the operator, and be vertical to the wall.

Ambient in the control cabinet:

- Temperature: 0～50 ℃
- Humidity: below 90% RH
- Vibration: 4.9m/s^2
- No freeze and condensation
- Using temperature: 50 ℃

►► Dimension

1. Servo motor

(1) MS-80ST-M02430□□-20P7 installation dimension Unit: mm

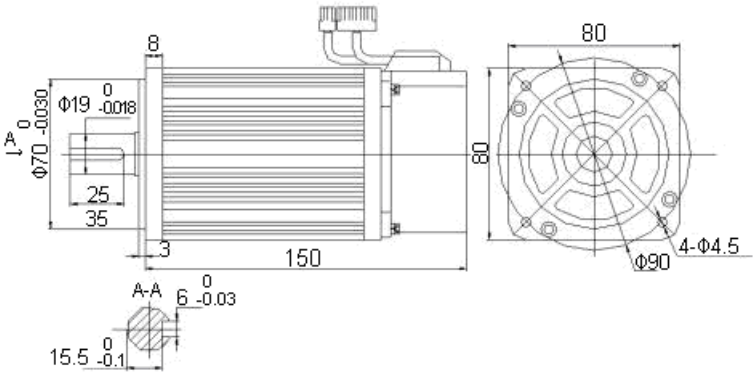

(2) MS-110ST-M06030□□-21P8 installation dimension Unit: mm

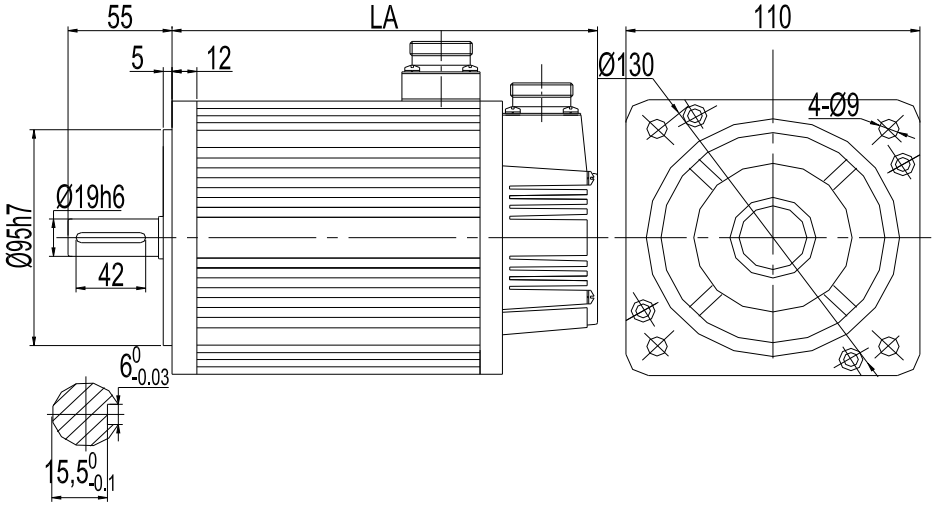

Type	LA
MS-110ST-M06030□□-21P8	219

(3) MS-130ST-M10015□□-21P5 installation dimension Unit: mm

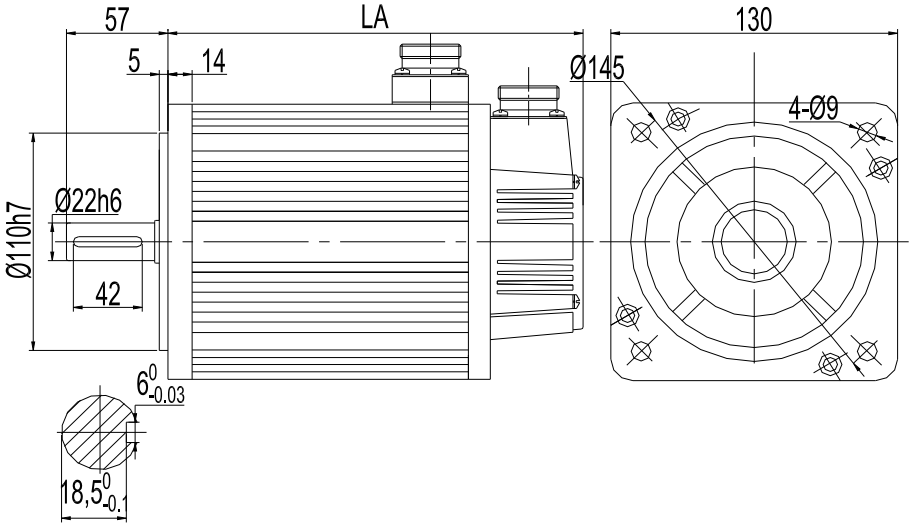

Type	LA
MS-130ST-M10015□□-21P5	213

2. Servo drive

Unit: mm

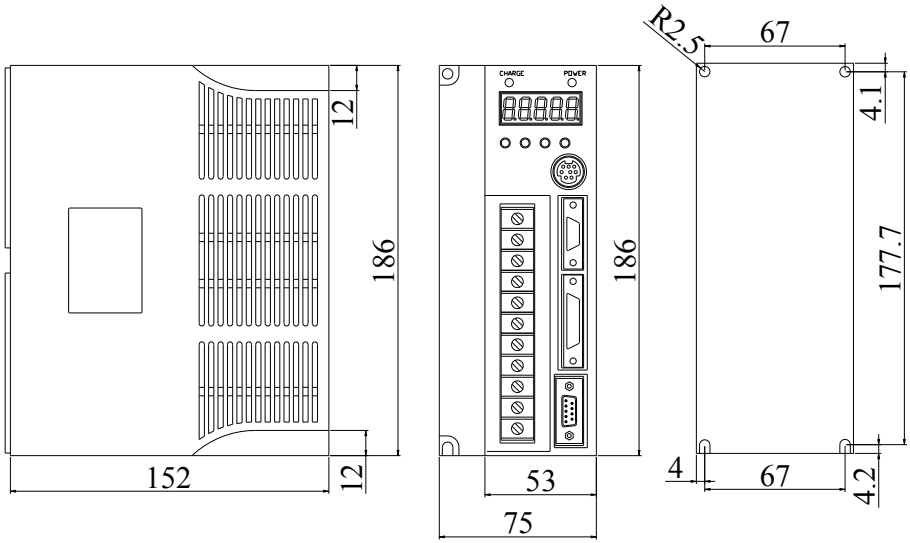

►► Wiring

1. Main circuit terminals

Terminal	Function	Explanation
⊕1, ⊕2	connect to the DC reactor	⊕1 and ⊕2 are shorted together. Connect reactor between ⊕1 and ⊕2 to suppress high harmonics
R, S, T	Power supply input	3-phase or single phase 200~240V, 50/60Hz
⏚	Ground	Connect to the ground terminal of power supply and motor and ground
U, V, W	Connect to the motor	Connect to the motor
P+, PB	Connect to the regenerative braking resistor	Connect regenerative braking resistor between P+ and PB

Notes: connect to any of the 2 terminals among R, S, T if the power supply is single phase.

2. Servo motor winding connector terminals

Signal	Motor terminal	
	80 series	110, 130 series
PE	4	1
U	1	2
V	3	3
W	2	4

3. CN1 terminal arrangement

Look at the solder side:

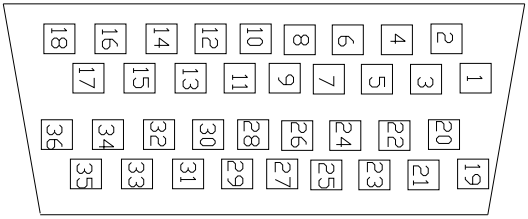

No.	Terminal	Explanation	No.	Terminal	Explanation
1	GND	Z phase transistor output	19	V-REF	Analog set, speed
2	CZ		20	GND	
3	SO3-	Output terminal 3	21	T-REF	Analog set, torque
4	SO3+		22	GND	
5	SO2-	Output terminal 2	23	PL1	Power supply for open collector
6	SO2+		24	PULS-	Input pulse A (pulse signal)
7	SO1-	Output terminal 1	25	PULS+	
8	SO1+		26	SIGN-	Input pulse B (pulse direction)
9	+24V	+24V for input terminal	27	SIGN +	
10	SI7	Input terminal 7	28	PL2	Power supply for open collector command
11	SI6	Input terminal 6	29	NC	Vacant
12	SI5	Input terminal 5	30	ZO+	Z phase differential output
13	SI4	Input terminal 4	31	ZO-	

14	NC	Vacant	32	BO+	B phase differential output
15	SI3	Input terminal 3	33	BO-	
16	SI2	Input terminal 2	34	AO+	A phase differential output
17	SI1	Input terminal 1	35	AO-	
18	GND	Ground	36	GND	Ground

4. I/O signal

(1) Input signal

Type	Input terminal	Function
Digital input	SI1~SI7	Multi-functional input
Pulse input	PULS+, PULS-	P2-00=1: A phase pulse; P2-00=2: pulse
	SIGN+, SIGN-	P2-00=1: B phase pulse; P2-00=2: direction
Analog input	V-REF	Set speed or limit speed
	T-REF	Set torque or limit torque

(2) Output signal

Type	Output terminal	Function
Optical output	SO1~SO3	Multi-functional output
Transistor output	CZ, GND	Z phase transistor output
Differential output	AO+, AO-	A phase differential output
	BO+, BO-	B phase differential output
	ZO+, ZO-	Z phase differential output

5. CN2 terminal arrangement

Look at the solder side:

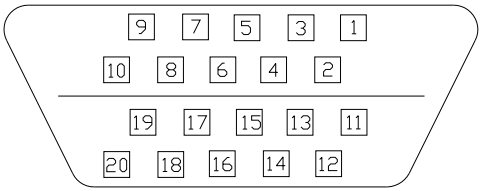

Drive port	Motor encoder port		Name	Drive port	Motor encoder port		Name
	80 series	110/130 series			80 series	110/130 series	
1	9	4	A+	2	13	7	A-
3	4	5	B+	4	14	8	B-
5	7	6	Z+	6	5	9	Z-
7	2	2	+5V	8			+5V
9			+5V	10			+5V
11	6	10	U+	12	8	13	U-
13	10	11	V+	14	12	14	V-
15	11	12	W+	16	15	15	W-
17	3	3	GND	18			GND
19			GND	20			GND
Cover	1	1	SHIELD				

6. Communication port

(1) COM1

COM1 support RS232 mode, connect with PC to debug the servo. When communicate with PC, set F5-00 to C-OUT mode, the panel operation is invalid. If exits C-OUT, the communication between PC and servo will be invalid.

The communication parameter of COM1 cannot be modified:

Baud rate: 19200bps, data bit: 8, stop bit: 1, even checking, Modbus station 1.

Look at the servo drive side, COM1 pin figure:

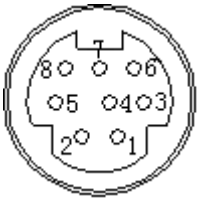

Pin	Name	Explanation
4	RXD	RS232 receive
5	TXD	RS232 send
8	GND	RS232 ground

(2) COM2

COM2 supports RS232 and RS485, Modbus-RTU protocol. It can realize 1:N communication. It is used to connect with HMI, PLC and other devices. Its parameters can be configured. Look at the servo drive side, COM2 pin figure:

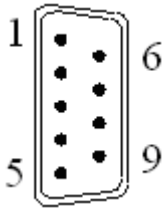

Pin	Name	Explanation
2	RXD	RS232 receive
3	TXD	RS232 send
5	GND	RS232 ground
7	B	RS485－
4	A	RS485＋

The parameters of COM2 can be set in P0-04:

Parameter	Function	Default value	Set range
P0-04.0	Baud rate	6	0~9 0: 300 1: 600 2: 1200 3: 2400 4: 4800 5: 9600 6: 19200 7: 38400 8: 57600 9: 115200
P0-04.1	Data bit	0	0: 8
P0-04.2	Stop bit	2	0: 2-bit 2: 1-bit
P0-04.3	Checking bit	2	0~2 0: no checking 1: odd 2: even

Modbus station No. can be set in P0-03.

Parameter	Function	Unit	Default value	Set range
P0-03	Modbus station No.	—	1	1~255

7. Connection example

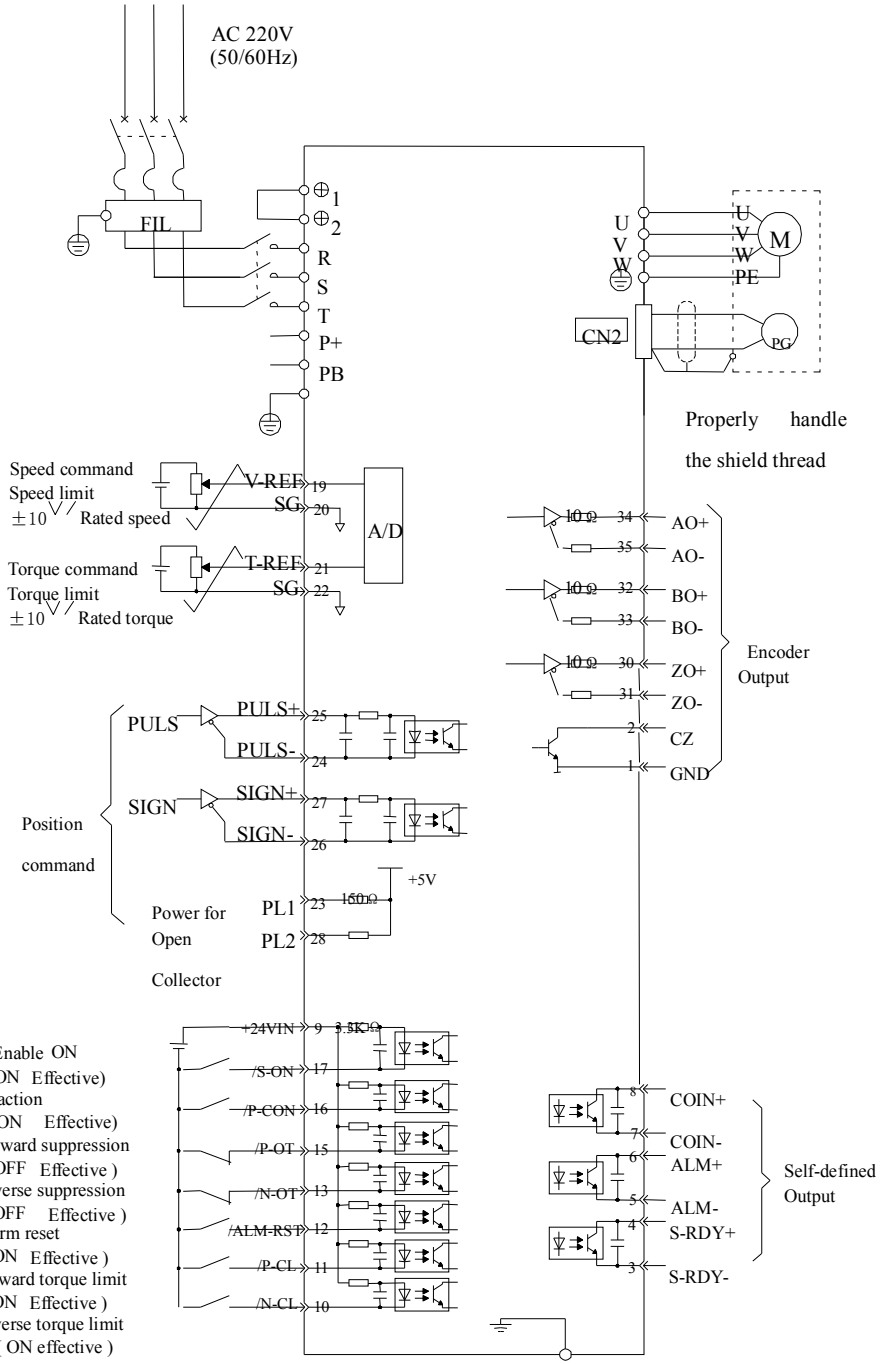
AC 220V
(50/60Hz)
FIL
1
2
R
S
T
P+
PB
U
V
W
U
V
W
PE
M
CN2
PG
Properly handle
the shield thread
Speed command
Speed limit
±10 Rated speed
V-REF 19
SG 20
A/D
Torque command
Torque limit
±10 Rated torque
T-REF 21
SG 22
10Ω 34 AO+
35 AO-
10Ω 32 BO+
33 BO-
10Ω 30 ZO+
31 ZO-
2 CZ
1 GND
Encoder
Output
PULS
PULS+ 25
PULS- 24
SIGN
SIGN+ 27
SIGN- 26
Position
command
+5V
Power for
Open
Collector
PL1 23 150Ω
PL2 28
+24VIN 9 3.3KΩ
Enable ON
(ON Effective)
P action
(ON Effective)
Forward suppression
(OFF Effective)
Reverse suppression
(OFF Effective)
Alarm reset
(ON Effective)
Forward torque limit
(ON Effective)
Reverse torque limit
(ON effective)
/S-ON 17
/P-CON 16
/P-OT 15
/N-OT 13
/ALM-RST 12
/P-CL 11
/N-CL 10
8 COIN+
7 COIN-
6 ALM+
5 ALM-
4 S-RDY+
3 S-RDY-
Self-defined
Output

►► Operation panel

1. Basic operation

Set the parameters by operation panel. 5-bit LED displays the servo state, parameters, alarm code.

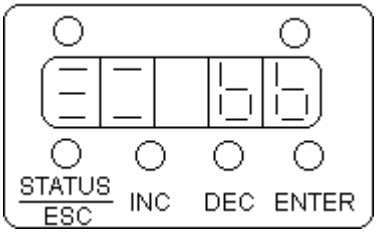

Button	Function
STATUS/ESC	Switch the state and return
INC	Increase or decrease the data, group number
DEC	
ENTER	Set and monitor the data

The operation panel function includes running state display, parameter setting, and running command.

The basic state includes running state, monitoring state, auxiliary function state, parameter setting state, alarm state. Press STATUS/ESC to see these states one by one.

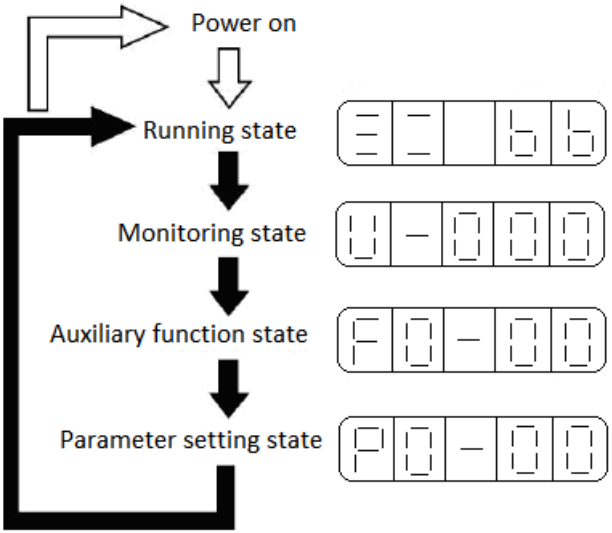

Monitoring state U-XXX: XXX means monitor parameter number

Auxiliary function state FX-XX: first X means group number, next two X means the parameter number in this group

Parameter setting state PX-XX: first X means group number, next two X means the

parameter number in this group

Alarm state E-XXX: XXX means alarm code

2. Running state

Display the servo state with LED bit and code in state display mode.

- Select the display state

  Power on and enter the state display. If you cannot see the state display, press STATUS/ESC button.

- The content of state display

  It is different in speed/torque mode and position mode.

Speed/torque mode:

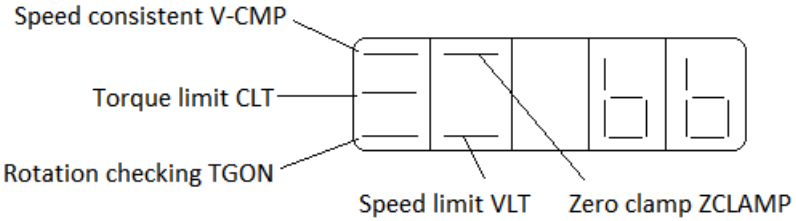

Bit display content:

Bit data	Content
Servo enable (S-ON)	ON when servo enable
Speed consistent (/V-CMP)	ON when the motor speed is equal to command speed. Speed consistent range: P5-03 (unit: rpm)
Torque limit (/CLT)	ON when the torque is larger than setting value in speed control Forward torque limit: P4-02 Reverse torque limit: P4-03
Rotation checking (/TGON)	ON when motor speed is larger than rotation checking speed Rotation checking speed: P5-02 (unit: rpm)
Zero clamp (/ZCLAMP)	ON when zero clamp is effective
Speed limit (/VLT)	ON when speed is larger than setting value in torque control Torque control speed limit: P4-07

Code content

Code	Content
bb	Sleep mode Servo OFF state (motor is not power on)
run	Running Servo enable state (motor is power on)
Pot	Forward suppression state P-OT OFF state. Refer to chapter 4-2-2
not	Reverse suppression state N-OT OFF state. Refer to chapter 4-2-2

Position control

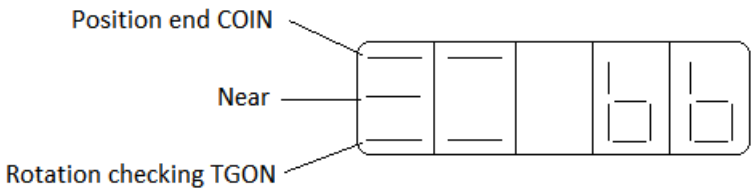

Bit display content

Bit data	Content
Position end (/COIN)	In position control, ON when set position is equal to actual position Position range: P5-00 (unit: command pulse)
Near (/NEAR)	In position control, ON when set position is equal to actual position Near signal range: P5-04
Rotation checking (/TGON)	ON when motor speed is higher than rotation checking speed Rotation checking speed: P5-02 (unit: rpm)

Code content

Code	Content
bb	Sleep mode Servo OFF state. (motor is power off)
run	Running Servo enable state. (motor is power on)
Pot	Forward suppression state P-OT OFF state
not	Reverse suppression state N-OT OFF state

3. Monitoring state

It is capable to monitor the input command, I/O signal and internal state of servo drive by monitoring state. The monitoring state can be changed even the motor is running.

■ How to use monitoring state

Take the monitoring code U-016 to explain.

1. Press STATUS/ESC, switch to the monitoring state, press ENTER.

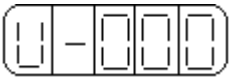

2. Press INC or DEC to select the monitoring code U-016, press ENTER to enter.

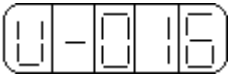

3. Now it will show the data in U-016. 0 means the servo drive is in normal state.

4. Press ENTER, the monitoring code will increase by 1.
5. Press STATUS/ESC to return to monitoring code switch state.

Monitoring code

Code	Content	Unit
U-000	Motor actual speed	rpm
U-001	Input speed command	rpm
U-002	Internal torque command	%
U-003	Rotation angle (physical angle)	0.1°

U-004	Rotation angle (electricity angle)		0.1°
U-005	Bus voltage		V
U-006	Module temperature		0.1 ℃
U-007	Input command pulse speed		rpm
U-008	Shift command pulse value	（0000～FFFF）*1	Command pulse
U-009		（0000～FFFF）*9999	
U-010	Rotation angle (encoder value)	（0000～FFFF）*1	Encoder pulse
U-011		（0000～FFFF）*9999	
U-012	Input command pulse quantity	（0000～FFFF）*1	Command pulse
U-013		（0000～FFFF）*9999	
U-014	Feedback command pulse quantity	（0000～FFFF）*1	Command pulse
U-015		（0000～FFFF）*9999	
U-016	Current position (accumulative)	（0000～FFFF）*1	Encoder pulse
U-017		（0000～FFFF）*9999	
U-018	Present current (precision=0.1)		0.1A
U-019	Analog input V-REF		0.01V
U-020	Analog input T-REF		0.01V
U-021	I/O signal state		
U-022	I/O terminal state		

U-021 can display the I/O signal state. Next we will explain them.

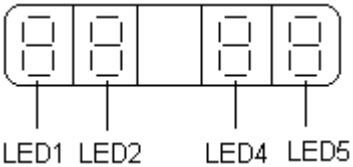

Figure 1

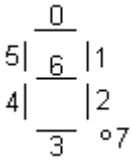

Figure 2

In figure 1, the input state will show in LED4 and LED5. The output state will show in LED1 and LED2. Figure 2 is the segment code of LED.

Input signal state

Segment Code	Explanation	Modbus address	Segment Code	Explanation	Modbus address
LED4_0	/SPD-A internal speed setting	0x0808	LED5_0	/S-ON servo signal	0x0800
LED4_1	/SPD-B internal speed setting	0x0809	LED5_1	/P-CON proportional action command	0x0801
LED4_2	/C-SEL control mode	0x080A	LED5_2	/P-OT forward suppression	0x0802
LED4_3	/ZCLAMP zero clamp	0x080B	LED5_3	/N-OT reverse suppression	0x0803
LED4_4	Vacant	0x080C	LED5_4	/ALM-RST clear the alarm	0x0804
LED4_5	/G-SEL gain switch	0x080D	LED5_5	/P-CL forward external torque limit	0x0805
LED4_6	/CLR clear the pulse	0x080E	LED5_6	/N-CL reverse external torque limit	0x0806
			LED5_7	/SPD-D internal speed setting	0x0807

Output signal state

Segment code	Explanation	Modbus address	Segment code	Explanation	Modbus address
LED1_0	Near (/NEAR)	0x081A	LED2_0	Position end (/COIN)	0x0812
LED1_1	Alarm output (/ALM)	0x081B	LED2_1	Speed consistent (/V-CMP)	0x0813
			LED2_2	Rotation checking (/TGON)	0x0814
			LED2_3	Ready (/S-RDY)	0x0815
			LED2_4	Torque limit (/CLT)	0x0816
			LED2_5	Speed limit	0x0817

				checking (/VLT)	
			LED2_6	Brake lock (/BK)	0x0818
			LED2_7	Warn (/WARN)	0x0819

Note: the state value read from communication: 0=OFF, 1=ON.

U-022 can display the I/O terminal state. Next we will explain them.

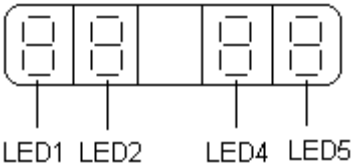

Figure 1

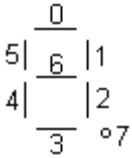

Figure 2

In figure 1, input terminal state will show in LED5, output terminal state will show in LED2. Figure 2 is the segment code of LED.

Input terminal		Output terminal	
Segment code	Explanation	Segment code	Explanation
LED5_0	SI1 input state	LED2_0	SO1 output state
LED5_1	SI2 input state	LED2_1	SO2 output state
LED5_2	SI3 input state	LED2_2	SO3 output state
LED5_3	SI4 input state		
LED5_4	SI5 input state		
LED5_5	SI6 input state		
LED5_6	SI7 input state		

4. Auxiliary function

Do some application operation on the operation panel in auxiliary function state.

Function code	Content
F0-**	View the system information
F1-**	Auxiliary running state, display running state, auxiliary running command, auxiliary running result
F3-**	View the alarm message, clear the alarm message
F4-**	Set the parameter to default value
F5-00	Monitor external communication

- **View the system information**

Press STATUS/ESC to switch to auxiliary function state, set the group number to 0. Press INC or DEC to select the code. Press ENTER to enter, press STATUS/ESC to return.

System information code:

Code	Explanation	Code	Explanation
F0-00	Motor code	F0-01	Series
F0-02	Type	F0-03	Out of factory date: year
F0-04	Out of factory date: month day	F0-05	Software version 1
F0-06	Software version 2	F0-07	Hardware version

- **Change the motor type**

Set the group number to 2 in auxiliary state, modify the motor type.

Servo drive can match to motors which have similar power. The motor type can be distinguished by the code on the motor label. If users need to change the motor type, check the manual in advance, make sure the motor is compatible with the drive. Below are the steps of change motor type.

1. Press STATUS/ESC, select auxiliary function state.
2. Press INC or DEC to select function group no. 2.
3. Press ENTER, it will show all the motor code.
4. Find the code match to the drive, press ENTER to exit.
5. Repower on the drive to make the setting effective.

- **Auxiliary operation**

In the auxiliary function state, set the group no. to 1, press ENTER. Press INC or DEC to select the command, press ENTER to make the command effective. The LED on the panel will show the running state, press STATUS/ESC to return.

(1) Jog (F1-00)

Make sure the motor is not connected to the machine before operation. Press ENTER to set whether to enable the drive. In enable the drive mode, press INC to forward jog, press DEC to reverse jog. Press STATUS/ESC to exit. Four states in jog mode:

State	Panel display	State	Panel display
Idle	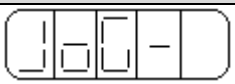	Forward jog	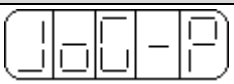

Enable	JOG--	Reverse jog	JOG-n

(2) Test run (F1-01)

Make sure the motor is not connected to the machine before test run.

When servo drive connects to non-original encoder or power cables, please enter test run state to ensure the encoder or power cables connect correctly.

In test run mode, the panel LED shows 0 and twinkles which means user must modify the voltage (unit: %). The suggested value for voltage is 20. Press ENTER to make the motor power on. The motor will forward run at certain speed. If the motor doesn't run, increase the voltage until the motor can run stable. If the connection is error, the motor will reverse run or lock at certain angle whatever how big is the voltage. Please cut the power at this time and check the connection carefully.

Press STATUS/ESC to exit.

(3) Current checking offset auto-adjustment

When servo drive finished self-update or the motor run unstable for long time, it needs to run current checking offset auto-adjustment. Select F1-02 to enter this function, the LED displays rEF. Press ENTER, the rEF is twinkling. After about 5s, the current checking offset auto-adjustment ends, the LED displays donE. Press STATUS/ESC to exit.

(4) Speed offset auto-adjustment

Select F1-03 to enter this function, LED displays rEF_o. Press ENTER, the rEF_o is twinkling. After about 1s, the speed offset auto-adjustment ends, the LED displays donE. Press STATUS/ESC to exit.

(5) Torque offset auto-adjustment

Select F1-04 to enter this function, the LED displays rEF_o. Press ENTER, rEF_o is twinkling. After about 1s, the torque offset auto-adjustment ends, the LED displays donE. Press STATUS/ESC to exit.

(6) Forced function (F1-05)

0: cancel this function

1: forced function enables

- **View the alarm information**

In auxiliary function state, set the group no. to 3 to enter alarm information. Below is the steps:

(1) Press STSTUS/ESC, select auxiliary function state.

(2) Press INC or DEC, set the function code to 3.

(3) Press ENTER, it will display the latest alarm code.

Alarm code	Content	Unit	Modbus address
F3-00	Current alarm code ※1		0x0716
F3-01	Current alarm code ※2		0x0717
F3-02	Alarm/warn code 1 when alarming		0x0718
F3-03	U-phase current when alarming	A	0x0719
F3-04	V-phase current when alarming	A	0x071A
F3-05	DC bus-voltage when alarming	V	0x071B
F3-06	IGBT module temperature when alarming	℃	0x071C
F3-07	The speed when alarming	rpm	0x071D
F3-08	Internal torque command when alarming	%	0x071E
F3-09	V-REF value when alarming	V	0x071F
F3-10	T-REF value when alarming	V	0x0720
F3-11	Alarm/warn code 2 when alarming		0x0728
F3-12	Alarm/warn code 3 when alarming		0x0729
F3-13	Alarm/warn code 4 when alarming		0x072A
F3-14	Alarm/warn code 5 when alarming		0x072B
F3-15	Alarm/warn code 6 when alarming		0x072C
F3-16	Alarm/warn code 7 when alarming		0x072D

※1: F3-00=0, means no alarm state.

※2: F3-01=0, means no warn state.

- **Factory reset**

  (1) close the servo enable signal (set OFF the S-ON signal or make the enable ineffective)

  (2) Press STATUS/ESC to enter auxiliary function state.

  (3) Press INC or DEC to set the group no. to 4.

  (4) Select F4-00. Set it to 1, press ENTER to confirm.

- **External monitoring**

In auxiliary function state, select parameter F5-00, it shows C-OUT (in external monitoring state, serial port 1 is effective, panel monitoring is ineffective). User can debug the servo drive in the PC at this time. Press STATUS/ESC to exit and return to panel monitoring.

5. Parameter setting

Select the function by setting the parameters. Below are the steps:

For example: change the P3-09 value from 2000 to 3000.

(1) Press STATUS/ESC, switch to parameter setting state, press ENTER.

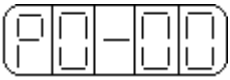

(2) The second LED is twinkling, press INC to change the group no. to 3, press ENTER to confirm.

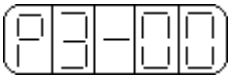

(3) The last two LEDs are twinkling, press INC or DEC to set the group no. to 9, press ENTER to confirm.

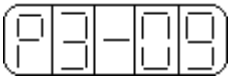

(4) Now it displays the value in P3-09 and twinkling. Press INC to change the value to 3000, press ENTER to confirm.

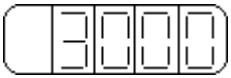

(5) Press STATUS/ESC to exit.

6. Error alarm

If there is error, the alarming will auto-display. E-XXX means system error. EEEEE means panel communication error. Press ENTER to reset the error. If the servo alarming causes the power off, it is no need to clear the alarming.

Note: when the alarm occurs, please find the reason, and then clear the alarming.

►► Parameter list

Effective time: "○" means servo OFF; "●" means power on; "√" means running and changeable.

Parameter construction: PX－XX＝<u>××</u>　<u>××</u>

PX－XX. H ↲　↳ PX－XX.L

1. Function selection P0 (address: 0000~00FF)

P0-	Function	Unit	Default value	Setting range	Effective time
00	Main mode	-	0	0	
01	Sub mode 1 0: idle 1: torque (command) 2: torque (analog) 3: speed (command) 4: speed (analog) 5: position (internal) 6: position (pulse) 7: speed (pulse)	-	0	0~7	○
02	Sub mode 2 0~7 the same as the above	-	0	0~7	○
03	Serial port 2 Modbus station no.	-	1	1~255	●
04	Serial port 2 parameters	-	2206	0~2209	●
05	Rotation direction selection 0: look at motor loader side, CCW is forward 1: look at motor loader side, CW is forward	-	0	0, 1	●
06	06.L: stop mode for servo OFF or alarming 0: stop by dynamic brake (DB). After stop, keep the DB state. 1: stop by dynamic brake (DB). After stop, release DB and change to inertial motion state. 2: stop inertial motion. Motor is power off. Stop by machine friction.	-	2	0~2	●
	06.H: stop mode when over-range (OT) 0: stop by dynamic brake (DB). After stop, release DB, change to inertial motion state. 1: inertial stop. After stop, keep inertial motion state. 2: deceleration stop. After stop, change to zero clamp state. Torque setting: P4-06 urgent stop	-	2	0~3	●

	torque. 3: deceleration stop. After stop, change to inertial motion state. Torque setting: P4-06 urgent stop torque.				
07	T-REF distribution 0: no 1: make T-REF as external torque limit input 2: un-defined 3: P-CL, N-CL is ON, make T-REF as external torque limit input.	-	0	0~3	○
08	V-REF distribution 0: no 1: make V-REF as external speed limit input.	-	0	0, 1	○
09	Reserved				
10	Reserved				

2. Control parameter P1 (address: 0100~01FF)

P1-	Function	Unit	Default value	Setting range	Effective time
00	Speed-loop gain	1Hz	100	1~5000	√
01	Speed-loop integral time	0.1ms	400	1~5000	√
02	Position-loop gain	1/s	30	1~2000	√
03	Rotation inertia ratio	%	0	0~20000	√
04	Second speed-loop gain	1Hz	150	1~5000	√
05	Second speed-loop integral time	0.1ms	100	1~5000	√
06	Second position-loop gain	1/s	80	1~2000	√
07	Reserved				
08	Reserved				
09	Position-loop feed-forward gain	1%	0	0~100	√
10	Feed-forward filter time	0.01ms	0	0~65535	√
11	Reserved				
12	Reserved				

13	Reserved				
14	Reserved				
15	Reserved				
16	Reserved				
17	Reserved				
18	Reserved				

3. Position control P2 (address: 0200~02FF)

P2-	Function	Unit	Default value	Setting range	Effective time
00	Command pulse mode 1: AB-phase pulse (90 degree phase, 4-time gain). 2: sign + pulse	-	2	1, 2	●
01	Position command filter selection 0: first-order inertial filter. 1: smooth filter.	-	0	0, 1	●
02	Electronic gear ratio (numerator)	-	1	1~65535	○
03	Electronic gear ratio (denominator)	-	1	1~65535	○
04	Position command filter time	ms	0	0~100	●
05	Reserved				
06	Command pulse frequency at rated speed	100Hz	5000	1~10000	○
07	Speed command pulse filter time	0.1ms	20	0~1000	√
08	Reserved				
09	Reserved				
10	Reserved				
11	Reserved				
12	Reserved				
13	Reserved				
14	Reserved				
15	Reserved				

4. Speed control P3 (address:0300~03FF)

P3-	Function	Unit	Default value	Setting range	Effective time
00	Analog value of rate speed	0.01V	1000	150~3000	○
01	Internal setting speed 1	rpm	100	-5000~+5000	√
02	Internal setting speed 2	rpm	200	-5000~+5000	√
03	Internal setting speed 3	rpm	300	-5000~+5000	√
04	JOG speed	rpm	100	0~1000	√
05	Soft start acceleration time	ms	0	0~65535	○
06	Soft start deceleration time	ms	0	0~65535	○
07	Speed command filter time	0.01ms	0	0~65535	○
08	Speed feedback filter time	0.01ms	20	0~65535	○
09	Max speed limit (MAX speed)	rpm	Rated speed 3000:4000 Rate speed 1500:2000	0~5000	○

5. Torque control P4 (address: 0400~04FF)

P4-	Function	Unit	Default value	Setting range	Effective time
00	Analog value of rated torque	0.01V	1000	150~3000	○
01	Torque command filter time	0.01ms	0	0~65535	○
02	Forward torque limit	1%	300	0~300	√
03	Reverse torque limit	1%	300	0~300	√
04	Forward external torque limit	1%	100	0~300	√
05	Reverse external torque limit	1%	100	0~300	√
06	Urgent stop torque	1%	300	0~300	○
07	Internal speed limit when torque controlling	rpm	2000	0~5000	○

08	Reserved				
09	Internal torque command setting	1%	0	-300~300	√

6. Signal parameter P5 (address: 0500~05FF)

P5-	Function	Unit	Default value	Setting range	Effective time
00	Positioning width /COIN	Command pulse	7	0~250	○
01	Zero clamp speed /ZCLAMP	rpm	10	0~300	○
02	Rotation checking speed /TGON	rpm	20	1~1000	○
03	Speed consistent signal checking width /V-CMP	rpm	10	1~250	○
04	Close output signal width /NEAR	Command pulse	50	0~10000	○
05	Differential pulse limit value	256 command pulse	1000	0~65535	○
06	Servo OFF delay time (brake command)	1ms	0	0~500	○
07	Brake command output speed	rpm	100	0~5000	○
08	Brake command wait time	1ms	500	10~1000	○
09	Input filter time	5ms	0	0~100	√
10	10.L: input signal distribution mode 0: external input accords to default value, P5-10.H~P5-17.H are unchangeable. 1: external input, can be set, P5-10.H~P5-17.H are changeable.	—	0	0, 1	√
	10.H: /S-ON servo signal 00: set the signal to always ineffective. 01: input positive signal from SI1. 02: input positive signal from SI2.	—	01	00~17	√

	03: input positive signal from SI3. 04: input positive signal from SI4. 05: input positive signal from SI5. 06: input positive signal from SI6. 07: input positive signal from SI7. 80: set the signal to always effective. 81: input negative signal from SI1. 82: input negative signal from SI2. 83: input negative signal from SI3. 84: input negative signal from SI4. 85: input negative signal from SI5. 86: input negative signal from SI6. 87: input negative signal from SI7.				
11	11.L: /P-CON proportion action command The setting is the same as P5-10.H	—	02	00~17	√
	11.H: P-OT forward run suppression The setting is the same as P5-10.H	—	13	00~17	√
12	12.L: N-OT reverse run suppression The setting is the same as P5-10.H	—	14	00~17	√
	12.H: /ALM-RST clear the alarm The setting is the same as P5-10.H	—	05	00~17	√
13	13.L: /P-CL forward external torque limit The setting is the same as P5-10.H	—	06	00~17	√
	13.H: /N-CL reverse external torque limit The setting is the same as P5-10.H	—	07	00~17	√
14	14.L:/SPD-D internal speed selection The setting is the same as P5-10.H	—	00	00~17	√
	14.H: /SPD-A internal speed selection	—	00	00~17	√

	The setting is the same as P5-10.H				
15	15.L: /SPD-B internal speed selection The setting is the same as P5-10.H	—	00	00~17	√
	15.H: /C-SEL control mode selection The setting is the same as P5-10.H	—	00	00~17	√
16	16.L: /ZCLAMP zero clamp The setting is the same as P5-10.H	—	00	00~17	√
	16.H: reserved				
17	17.L: /G-SEL gain switch The setting is the same as P5-10.H	—	00	00~17	√
	17.H: /CLR clear pulse offset The setting is the same as P5-10.H	—	00	00~17	√
18	Reserved				
19	Input filter time	5ms	4	0~100	√
20	20.L: /COIN positioning end 00: not output to the terminal 01: output positive signal from SO1 02: output positive signal from SO2 03: output positive signal from SO3 81: output negative signal from SO1 82: output negative signal from SO2 83: output negative signal from SO3	—	01	00~13	√
	20.H: /V-CMP speed consistent checking The setting is the same as P5-20.L	—	00	00~13	√
21	21.L: /TGON rotation checking The setting is the same as P5-20.L	—	00	00~13	√
	21.H: /S-RDY ready The setting is the same as P5-20.L	—	03	00~13	√
22	22.L: /CLT torque limit The setting is the same as P5-20.L	—	00	00~13	√
	22.H: /VLT speed limit checking	—	00	00~13	√

	The setting is the same as P5-20.L				
23	23.L: /BK brake lock The setting is the same as P5-20.L	—	00	00~13	√
	23.H: /WARN warn The setting is the same as P5-20.L	—	00	00~13	√
24	24.L: /NEAR near The setting is the same as P5-20.L	—	00	00~13	√
	24.H: /ALM alarm The setting is the same as P5-20.L	—	02	00~13	√
25	Reserved				

►► Alarm information

Alarm code	Explanation	Reason	Solution
E-001	Program damage	Cannot pass program self-test	Re-download the program, contact with XINJE company
E-002	Parameter damage	Cannot pass parameter self-test	Re-power on to reset the parameter, if the recurring problems, please contact with XINJE company
E-003	Bus over-voltage	Power grid voltage is too high, not connect regenerative resistor, regenerative resistor damage or resistor is too large	Check the power grid and regenerative resistor
E-004	Bus under-voltage	Power grid voltage is too low	Check the power grid voltage
E-005	Regenerative resistor error	Regenerative resistor is ineffective	Check the connection of regenerative resistor
E-006	Module temperature is too	Run with big loader for long time, causes power	decrease the loader, check the ventilation device, servo fan,

	high	module temperature too high, ambient temperature too high	decrease the ambient temperature
E-007	Over current	Drive U, V, W output short or motor error	Change motor, check motor U, V, W connection
E-008	Over speed	Motor speed too fast, motor U, V, W connection error	Check if there is external force make the motor run too fast, check motor U, V, W connection
E-009	Analog input error	Input voltage is error when adjust zero for 2-channel analog	Input correct voltage when adjust zero for 2-channel analog
E-010	Position offset too large	The difference between setting and actual position is over the limit when position control	Check if the motor is blocked, decrease the setting speed, increase the value of P5-05
E-011	Motor U, W, W short	External short after power on self-test	Check the connection of U, V, W, change damage motor
E-012	Motor U, V, W current error	Current collection circuit error	Check the motor wiring, change the servo unit
E-013	Encoder U, V, W break	Not connect encoder, encoder wiring error, encoder damage	Check the encoder wiring, change encoder or reconnect it after power off
E-014	Encoder A, B, Z break	Not connect encoder, encoder wiring error, encoder damage	Check the encoder connection, change the encoder or reconnect it after power off
E-015	Speed changes too large (encoder feedback error)	Encoder wiring error, encoder is influenced by serious interference	Add shield layer and check the encoder connection
E-016	Over load	Over load for long time	Change higher power motor or decrease run-time of over load
E-017	Power off when running	The power grid cut off when running	Re-power on and wait until the bus voltage is stable

►► Common setting

1. It needs to do current checking offset auto-adjustment under below states:

- New servo drive
- After updated the hardware
- Reset to out of factory parameters

Current checking offset auto-adjustment please refers to parameter F1-02.

2. Over range signal (P-OT/N-OT) and servo enable signal (S-ON)

(1) Over range signal

P-OT and N-OT input from terminal SI3 and SI4 separately. When the signal is ON (SI3/SI4 are 24V), ban forward or reverse rotation; when the signal is OFF (SI3/SI4 are 0V), enable forward or reverse rotation.

The settings when users don't use over range signal: (XX means any value or keep the original value)

Parameter code	P5-10	P5-11	P5-12
Explanation	Enable to change terminal distribution	P-OT	N-OT
Setting value (HEX)	XX01	00XX	XX00

(2) Servo enable signal

The servo enable signal input from SI1. When the signal is OFF (SI1 is 0V), the servo enables. When the signal is ON (SI1 is 24V), the servo doesn't enable, power off.

The settings when the servo enables (XX means any value or keep the original value)

Parameter code	P5-10
Explanation	S-ON and enable to change terminal distribution
Setting value (HEX)	8001

3. Simple settings of operation mode

(1) External pulse control

PLC or other motion controller sends continuous pulse, servo drive positioning according to the received pulse quantity and frequency. The electronic gear ratio can be set freely.

For example: PLC output continuous pulse, the pulse mode is "pulse + direction". The servo motor rotates 1.75 circles per 15000 pulses.

Wiring:

(a) “pulse + direction” signal: “pulse” connects CN1-24/CN1-25, “direction” connects CN1-26/CN1-27.

(b) “AB-phase” signal: A-phase connects CN1-24/CN1-25, B-phase connects CN1-26/CN1-27.

(c) The shield layer connects to COM terminal of PLC.

The details please refer to DS series servo manual

Parameters:

Calculate the electronic gear ratio:

15000 × gear ratio = 1.75 × pulse quantity per rotation of servo motor

Pulse quantity per rotation of servo motor = 2500 × 4 = 10000, so gear ratio = 7/6.

Parameter code	P0-00	P0-01/P0-02	P2-00	P2-02	P2-03
Explanation	Main mode	Sub mode	Pulse mode	Numerator of electronic gear ratio	Denominator of electronic gear ratio
Setting value (HEX)	0	6	“AB phase” signal: 1 “pulse+direction” signal: 2	7	6

(2) Segment speed control (internal setting speed)

For example: SPD-D, SPD-A, SPD-B connects to SI2, SI6, and SI7 separately which are all positive signal input, uses software filter. Three segments of speed are 100rpm, 500 rpm, 1500 rpm, soft start acceleration/deceleration time is 200ms.

Wiring:

SPD-D connects to CN1-16, SPD-A connects to CN1-11, SPD-B connects to CN1-10, external 24V power supply connects to CN1-9.

Terminal parameter setting:

Parameter code	P5-10	P5-14	P5-15
Explanation	Enables to change terminal distribution	SPD-A、SPD-D	SPD-B
Setting value (HEX)	XX01	0602	XX07

Mode parameters:

Parameter code	P0-00	P0-01/ P0-02	P3-01	P3-02	P3-03	P3-05	P3-06
Explanation	Main mode	Sub mode	Speed 1	Speed 2	Speed 3	Soft start acceleration time	Soft start deceleration time
Setting value (decimal)	0	3	100	500	1500	200	200

(3) Mode switch

The servo drive can switch to any modes seamlessly.

Users only need to set the parameter in single mode:

Parameter code	P5-10	P5-15
Explanation	Enables to change the terminal distribution	C-SEL
Setting value	XX01	00XX

At this time, it is ineffective to set P0-02 to sub mode 2.

If user wants to switch between two modes, please follow below steps:

For example: C-SEL signal inputs from terminal SI2, positive signal, uses software filter.

Wiring:

C-SEL connects to CN1-16; external 24V power supply connects to CN1-9.

Parameters:

Parameter code	P5-10	P5-15
Explanation	Enables to change the terminal distribution	C-SEL
Setting value	XX01	02XX

Xinje Electronic Co., Ltd.

4th Floor Building 7,Originality Industry park, Liyuan Development Zone, Wuxi, Jiangsu Province, China 214072

Tel: 86-510-85166657-221

Fax: 86-510-85111290

www.xinje.com